STONE HEARTH & SPECIALTY COMMERCIAL COOKING EQUIPMENT

PRODUCT CATALOG

WOOD STONE

The POWER to PERFORM

version 6.0

WOOD STONE

TABLE OF CONTENTS

Welcome to Wood Stone 3
Ordering Equipment 4
Stone Hearth Oven Fuel Configurations 5
Oven Selection and Capacities 6

FIRE DECK SERIES (WS-FD)
Fire Deck Automatic 9660 7
Fire Deck 6045 9
Fire Deck 8645 11
Fire Deck 9660 13
Fire Deck 9690 15
Fire Deck 11260 17
Fire Deck 11275 19
Fire Deck 11290 21
Fire Deck Series Storage Boxes 23
Fire Deck Series Oven Mantles 24
Fire Deck Series Double Doors 25
Fire Deck Series Decorative Flame 26

MOUNTAIN SERIES (WS-MS)
Mt. Chuckanut 4' 27
Mt. Adams 5' 29
Mt. Baker 6' 31
Mt. Rainier 7' 33
Mountain Series Oven Mantles 35
Mountain Series Facade Extensions 36
Mountain Series Stand-Mounted Storage Boxes 38
Mountain Series Ceramic Logset 39
Mountain Series Double Doors 40

BISTRO LINE (WS-BL)
Bistro 3030 41
Bistro 4343 43
Bistro 4355 45
Bistro 4836 47
Bistro Line Storage Boxes 49
Bistro Line Ceramic Logset 50

TRADITIONAL SERIES
Traditional Series 5' 51
Traditional Series 6' 53

SPECIALTY OVENS
Gas Rice Cooker 55
Tandoor 31" (Round and Square) 57
Tandoor 35" (Round and Square) 59
Barrel Tandoor 61
Pita Bread Oven (Dual Burner Bistro) 63
Bagel Oven 90-112 65
Coal-Fired Oven 9660-CL 67
Coal-Fired Oven 9690-CL 69
Coal-Fired Oven 11260-CL 71
Coal-Fired Oven 11275-CL 73
Coal-Fired Oven 11290-CL 75

PLANCHAS
Gas Plancha 24 77
Gas Plancha 36 79
Gas Plancha 48 81
Gas Plancha 60 83
Electric Plancha 85

ROTISSERIES
Whatcom Gas Vertical Rotisserie 87
Whatcom Gas Vertical Rotisserie (Countertop) 89
Mt. Olympus Solid Fuel Rotisserie 91
Mt. Olympus Solid Fuel Rotisserie with Charbroiler 93
Cascade Gas-Fired Rotisserie 95
Okanogan Single-Spit Rotisserie 97

CHARBROILERS - SOLID FUEL
Mt. St. Helens Solid Fuel Charbroiler (36 Series) 99
Mt. St. Helens Solid Fuel Charbroiler (26 Series) 101
Mt. Shuksan Deep Box Solid Fuel Charbroiler 103

CUSTOM ACCESSORIES
Exhaust Fans 105
Oven-Mounted Exhaust Hoods 106
Oven Arches 108
Bake Shelves 110
Custom Finishes 112
Air-Cooled Viewing Window 114

SERVICE INFORMATION
Limited Warranty 117

THIS PAGE INTENTIONALLY LEFT BLANK

t. 360.650.1111
tf. 800.988.8103
f. 360.650.1166

Wood Stone Corporation
1801 W. Bakerview Rd.
Bellingham, WA 98226 USA
info@woodstone-corp.com
woodstone-corp.com

REVISED: SUMMER 2021

An ongoing program of product improvement may require us to change specifications without notice.

WOOD STONE

Welcome to Wood Stone!

Wood Stone Corporation, based in Bellingham, Washington, has been manufacturing stone hearth and specialty commercial cooking equipment for the foodservice industry since 1990. We have more than 15,000 installations in over 80 countries worldwide.

Wood Stone built its reputation on our family of stone hearth ovens. Our technologically advanced ceramics and engineering expertise, coupled with our high quality construction techniques and attention to detail, are typical of all of our products and relied upon by our loyal customers. Our product offerings have grown since inception and Wood Stone now also designs, engineers and manufactures a line of specialty commercial cooking equipment in addition to our oven offerings.

Changing the Way You Cook since 1990

In 1989, challenged with the task of finding a wood-fired stone hearth oven or "brick oven" that could withstand the intense rigors of the restaurant world, Keith Carpenter set out for perfection. Inspired to create a better wood-fired oven, Carpenter pitched some ideas to Harry Hegarty, an experienced builder of large-scale, high-temperature ceramic incinerators. This meeting marked the beginning of an integral partnership, and by 1990, Wood Stone was born.

Just five years later in 1995, Wood Stone introduced gas-fired and gas-assist stone hearth ovens, with many different configurations to meet the breadth of commercial demands and most importantly, the needs of high-yield cook lines. Ever since, the value, versatility and production of our ovens have continued to grow, driven by high industry demands. With the large 2007 expansion of our manufacturing facility—including a dedicated research and development lab and a state-of-the-art integrated metal fabrication system—Wood Stone now spans over 117,000 square feet.

Additionally, our facility offers a full-service 1,500-square-foot Test Kitchen. Inside, our corporate chefs immerse visitors in all things Wood Stone, showcasing our unique recipes and enabling customers to try their hand using the ovens. Year round, the Bellingham Test Kitchen sees chefs from small "mom and pop" pizza parlors to corporate chain restaurants to hotels and educational institutions.

In January of 2014, Wood Stone was acquired by the Henny Penny Corporation, a global leader in foodservice equipment solutions and the inventor of the first commercial pressure fryer. Located in Eaton, Ohio, Henny Penny manufactures commercial-grade cooking, holding and merchandising equipment for thousands of restaurants, supermarkets and institutions around the world. Like Wood Stone, Henny Penny is a market leader and premier brand in the foodservice equipment industry.

Most recently on December 30, 2014, Henny Penny and Wood Stone became employee-owned (ESOP). This new chapter ensures our continuing success as privately held and independently operated companies. Together, we look forward to a bright future.

Throughout the years the mission of Wood Stone has been steadfast. Committed to quality, innovation and customer satisfaction, Wood Stone is here for you.

t. 360.650.1111
tf. 800.988.8103
f. 360.650.1166

Wood Stone Corporation
1801 W. Bakerview Rd.
Bellingham, WA 98226 USA
info@woodstone-corp.com
woodstone-corp.com

REVISED: SUMMER 2021

An ongoing program of product improvement may require us to change specifications without notice.

ORDERING EQUIPMENT

WOOD STONE

Wood Stone sells stone hearth and specialty commercial cooking equipment through Foodservice Equipment Dealers. If you are not working with a dealer, please contact the Wood Stone representative in your area by visiting us online at woodstone-corp.com/contact or by calling us at 800.988.8103.

t. 360.650.1111
tf. 800.988.8103
f. 360.650.1166

Wood Stone Corporation
1801 W. Bakerview Rd.
Bellingham, WA 98226 USA
info@woodstone-corp.com
woodstone-corp.com

REVISED: SUMMER 2021

An ongoing program of product improvement may require us to change specifications without notice.

WOOD STONE

WOOD STONE

STONE HEARTH OVEN FUEL CONFIGURATIONS

Wood Stone ovens can be configured to operate with gas and/or solid fuel. If you are undecided on your fuel source, here are some important considerations to take into account:

- Availability and Quality of the Fuel Source
- Storage & Disposal (Solid Fuel Only)
- Ventilation
- Cleaning
- Operation

Here's a brief description of the fundamental heat sources, using a Mountain Series oven as an example.

- **Radiant Flame Burner (Gas):** The RFG burner is the primary heat source, heating both the stone floor (hearth) and dome and providing the radiant heat within the cooking chamber. Adjusting the temperature is achieved by turning the Flame Height Control Knob. **(RFG)**
- **Underfloor Infrared Burner (Gas):** The IR burner is thermostatically controlled, acting as an assist to maintain floor temperature during heavy production periods. **(IR)**
- **Wood-Fired (Solid Fuel):** Wood-fired only ovens depend exclusively on a hardwood fire to heat the stone floor. **(W)**
- **Coal-Fired (Solid Fuel):** Coal-fired ovens use an anthracite coal fire in combination with a Radiant Flame burner and Underfloor IR burner to heat the oven. Wood Stone has a specialty line of Fire Deck Series ovens dedicated to coal-fired configurations. For additional information, please visit our Specialty Ovens section in this catalog. **(CL)**

Select ovens can be configured to combine these fuel sources depending upon your specific requirements. For additional information on fuel configurations, visit us online at woodstone-corp.com or give us a call today at 800.988.8103.

t. 360.650.1111
tf. 800.988.8103
f. 360.650.1166

Wood Stone Corporation
1801 W. Bakerview Rd.
Bellingham, WA 98226 USA
info@woodstone-corp.com
woodstone-corp.com

REVISED: SUMMER 2021

An ongoing program of product improvement may require us to change specifications without notice.

WOOD STONE

OVEN SELECTION AND CAPACITIES

WOOD STONE

FIRE DECK SERIES FLOOR PLANS

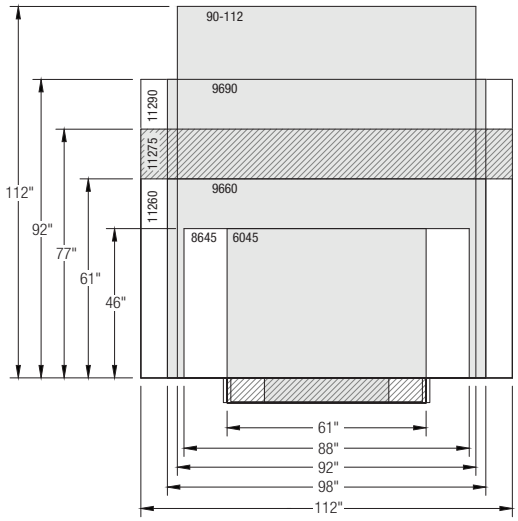

HEARTH PIZZA CAPACITY

Oven Model	8" pizza	10" pizza	12" pizza	16" pizza	18" pizza
Fire Deck Automatic	40	24	18	8	12
Fire Deck 6045	16	10	6	2	n/a
Fire Deck 8645	20	14	10	5–6	n/a
Fire Deck 9660	40	24	18	8	n/a
Fire Deck 9690	60	40	36	16	12
Fire Deck 11260	50	32	21	10	8
Fire Deck 11275	67	50	35	15	12
Fire Deck 11290	75	55	42	20	16
Fire Deck 90-112	74	54	42	19	12

Table above does not include coal-fired models. Please refer to the specific model's product page for its capacities.

MOUNTAIN SERIES FLOOR PLANS

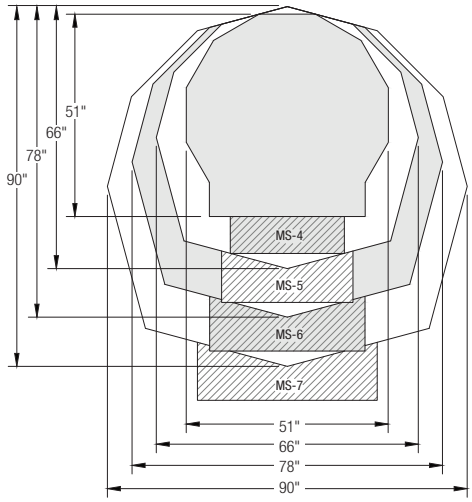

HEARTH PIZZA CAPACITY

Oven Model	8" pizza	10" pizza	12" pizza	16" pizza
Mt. Chuckanut 4'	8–10	5–6	4	1–2
Mt. Adams 5'	12–16	10–12	10	5
Mt. Baker 6'	18–22	14–16	14-16	6–8
Mt. Rainier 7'	36–40	22–26	16–20	8–10

Highlighted oven and capacity combinations are considered an operational challenge.

Note: Adding wood to an oven with an RFG burner will reduce available hearth capacity.

Traditional Series oven dimensions and capacities are identical to the similarly-sized Mountain Series oven.

BISTRO LINE FLOOR PLANS

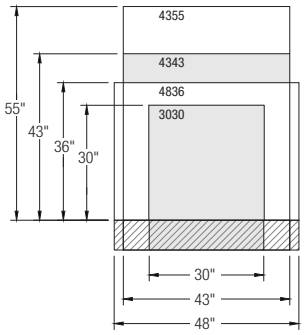

HEARTH PIZZA CAPACITY

Oven Model	8" pizza	10" pizza	12" pizza	16" pizza
Bistro 3030	4	2–3	1	n/a
Bistro 4343	8	6	4	2
Bistro 4355	9–12	9	6	4
Bistro 4836	8	6	4	2

Note: Adding wood to an oven with an RFG burner will reduce available hearth capacity.

REVISED: SUMMER 2021

An ongoing program of product improvement may require us to change specifications without notice.

t. 360.650.1111
tf. 800.988.8103
f. 360.650.1166

Wood Stone Corporation
1801 W. Bakerview Rd.
Bellingham, WA 98226 USA
info@woodstone-corp.com
woodstone-corp.com

WOOD STONE

 WARNING Cancer and Reproductive Harm - www.P65Warnings.ca.gov

WOOD STONE

FIRE DECK AUTOMATIC
AUTOMATIC STONE HEARTH OVEN

Job Name	
Model	WS-FA-9660
Item#	

WS-FA-9660
Shown with optional Decorative Flame

HEARTH CAPACITY

8" pizzas:	40
10" pizzas:	24
12" pizzas:	18
16" pizzas:	8

Assuming 5-minute cook times, the approximate maximum hourly production capacity can be calculated by multiplying the above numbers by 12. Cook times will also vary depending on "style" of pizza. ***Note:*** *The addition of an optional decorative flame will decrease space and impact overall cooking capacity.*

The FA-9660 features fully automatic touchscreen control with preset cooking cycles for stress free pizza cooked right, every time. The burners are designed for even heating throughout the oven. Easily removable crumb trays below burners and mantle allow for simple maintenance procedures. The oven features a door opening 54 inches wide x 10 inches high with a stainless steel debris mantle at the hearth. The cooking area is 75 inches wide x 44 inches deep, resulting in a 23-square-foot cooking surface. A tensioned steel exoskeleton surrounding the hearth and dome perimeter ensures structural integrity and longevity. Wrapped in spun ceramic fiber insulation and requiring only a 1-inch side clearance to combustibles, the monolithic cast-ceramic 4-inch thick hearth and monolithic 4-inch thick dome rest on a black painted steel stand. The oven body, top, back and sides are finished with galvanized steel. The front is finished in stainless steel. The oven arrives completely assembled, ETL Listed, ready to install and is made in the USA. A set of optional rigging casters is available to aid in the initial installation. Information about custom finishes, tools and accessories can be found online at: woodstone-corp.com.

CONFIGURATIONS

GAS-FIRED ONLY: Configured to burn natural gas (NG)

❑ **RADIANT FLAME + UNDERFLOOR IR (RFG-IR):** Heated by an easily adjustable radiant flame located on both sides of the cooking chamber, along with a thermostatically controlled infrared burner which is mounted under the oven deck to ensure high production capacity.

❑ **DECORATIVE FLAME (-DF):** Provides an additional 15,000 BTU/hr flame at rear of cooking chamber for show.

Intertek
ANSI Z83.11:2016 Ed.4
CSA 1.8:2016 Ed.4

Intertek
ANSI/NSF 4:2016

t. 360.650.1111
tf. 800.988.8103
f. 360.650.1166

Wood Stone Corporation
1801 W. Bakerview Rd.
Bellingham, WA 98226 USA
info@woodstone-corp.com
woodstone-corp.com

REVISED: SUMMER 2021

An ongoing program of product improvement may require us to change specifications without notice.

WOOD STONE

WARNING Cancer and Reproductive Harm - www.P65Warnings.ca.gov

FIRE DECK AUTOMATIC

STONE HEARTH OVEN • WS-FA-9660

A	Flue Collar
B	Mantle
C	Touchscreen Controller
D	Forklift Here
E	Service Panel or Optional Storage Box
	Electrical Connection (accessible from inside or outside)
G	Gas Connection
	Must Be Left Removable for Service
	AIR INTAKE: Do Not Facade or Cover Over

PLAN VIEW

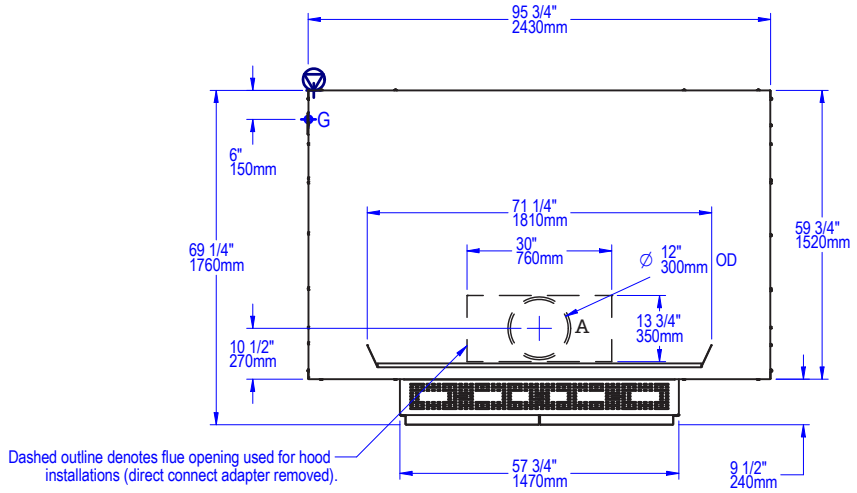

SIDE VIEW

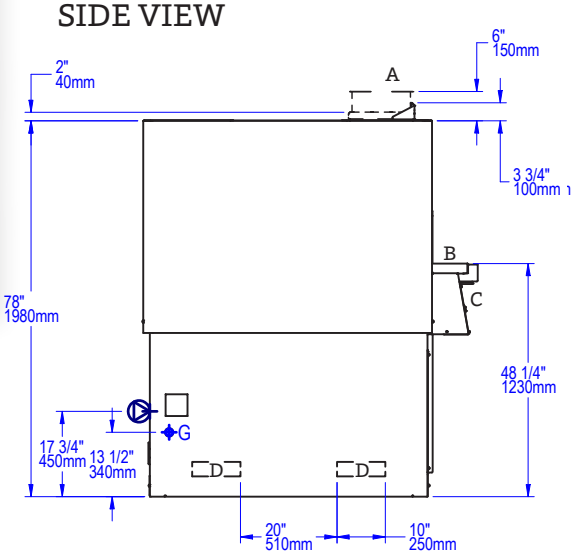

FRONT VIEW

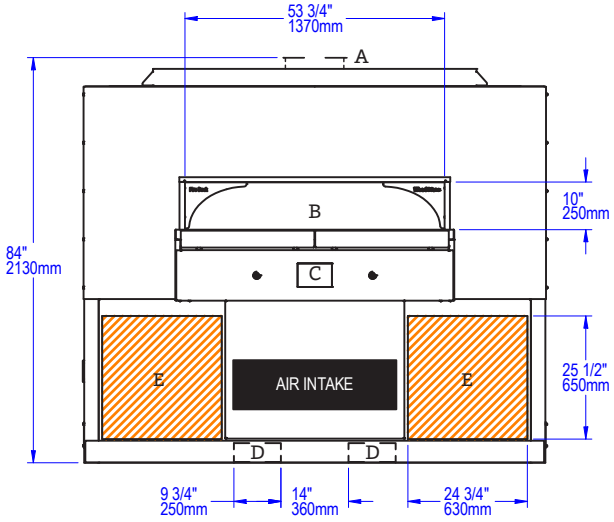

UTILITIES SPECIFICATIONS

GAS

Gas-Fired Only

1 inch gas inlet (FNPT)

295,000 BTU/hr - Natural Gas (NG)

ELECTRICAL

Gas-Fired Only

120 VAC, 2 A, 50/60 Hz

Connection made on left side of oven as shown

	BTU/hr Output Per Burner
Radiant Flame Burner	97,500 NG
IR Burner	100,000 NG
Decorative Flame Adds	15,000 NG

VENTING INFORMATION

The Fire Deck 9660 can be direct connected to a power-ventilated, grease-rated chimney or be vented using a Listed Type 1 exhaust hood, or a hood constructed and installed in accordance with NFPA 96 and all relevant local and national codes. The oven must be vented in accordance with all relevant local and national codes, and in a manner acceptable to the authority having jurisdiction.

Ship Weight: 6,000 lbs / 2,722 kg

Intertek
ANSI Z83.11:2016 Ed.4
CSA 1.8:2016 Ed.4

Intertek
ANSI/NSF 4:2016

t. 360.650.1111
tf. 800.988.8103
f. 360.650.1166

Wood Stone Corporation
1801 W. Bakerview Rd.
Bellingham, WA 98226 USA
info@woodstone-corp.com
woodstone-corp.com

REVISED: SUMMER 2021, r0

An ongoing program of product improvement may require us to change specifications without notice.

WOOD STONE

WARNING Cancer and Reproductive Harm - www.P65Warnings.ca.gov

WOOD STONE

FIRE DECK 6045
STONE HEARTH OVEN

Job Name	
Model	WS-FD-6045
Item#	

WS-FD-6045-RFG-R-IR configuration shown.

The Fire Deck 6045 oven features a door opening 34 inches wide x 9.75 inches high, complemented by a glass heat shield and stainless steel mantle. The cooking area is 42 inches wide x 31 inches deep, resulting in a 9-square-foot cooking surface. A tensioned steel exoskeleton surrounding the hearth and dome perimeter ensures structural integrity and longevity. Wrapped in spun ceramic fiber insulation and requiring only a 1-inch side clearance to combustibles, the monolithic 4-inch thick cast-ceramic hearth and monolithic 4-inch thick dome rest on a black painted steel stand. The oven body front is finished with stainless steel; galvanized steel is used for the top, back and sides. The oven arrives completely assembled, ETL Listed, ready to install and is made in the USA. A set of optional rigging casters is available to aid in the initial installation. Information about custom finishes, tools and accessories can be found online at: woodstone-corp.com.

HEARTH CAPACITY

8" pizzas:	16
10" pizzas:	10
12" pizzas:	6
16" pizzas:	2

Assuming 5-minute cook times, the approximate maximum hourly production capacity can be calculated by multiplying the above numbers by 12. Cook times will also vary depending on "style" of pizza. ***Note:*** *The addition of an optional decorative flame will decrease space and impact overall cooking capacity.*

GUIDE TO MODEL NUMBERS

	Underfloor IR Burner	Left Side Radiant Flame	Right Side Radiant Flame	Decorative Flame (-DF)	Wood Required	Combination	Natural Gas	Liquid Propane
WS-FD-6045-RFG-L-IR	X	X		-DF			-NG	-LP
WS-FD-6045-RFG-L-IR-W	X	X				X	-NG	-LP
WS-FD-6045-RFG-R-IR	X		X	-DF			-NG	-LP
WS-FD-6045-RFG-R-IR-W	X		X			X	-NG	-LP
WS-FD-6045-W-IR	X				X		-NG	LP
WS-FD-6045-W					X			

FUEL CONFIGURATIONS

GAS-FIRED ONLY: Configured to burn either natural gas (NG) or liquid propane (LP).*

- ❑ **RADIANT FLAME + UNDERFLOOR IR (RFG-IR):** Heated by an adjustable radiant flame located on one side of the cooking chamber, along with a thermostatically controlled infrared burner which is mounted under the oven deck to ensure high production capacity. Flame side must be specified at time of order.
- ❑ **DECORATIVE FLAME (-DF):** Provides an additional 15,000 BTU/hr flame at rear of cooking chamber for show. **Note:** Option will reduce available hearth capacity.

❑ **WOOD-FIRED (W):** Wood-fired only.

❑ **WOOD WITH GAS ASSIST (W-IR):** This wood-fired model is assisted by the additional BTUs of an Underfloor IR burner. **Note:** A wood fire is required with this configuration.

❑ **COMBINATION (-W):** Allows optional wood burning for ovens with gas burner configurations.* **Note:** Adding wood to an oven with an RFG burner will reduce available hearth capacity.

*Gas type must be specified at time of order.

Intertek
ANSI Z83.11:2016 Ed.4
CSA 1.8:2016 Ed.4

Intertek
ANSI/NSF 4:2016

t. 360.650.1111
tf. 800.988.8103
f. 360.650.1166

Wood Stone Corporation
1801 W. Bakerview Rd.
Bellingham, WA 98226 USA
info@woodstone-corp.com
woodstone-corp.com

REVISED: SUMMER 2021

An ongoing program of product improvement may require us to change specifications without notice.

WOOD STONE

WARNING Cancer and Reproductive Harm - www.P65Warnings.ca.gov

FIRE DECK 6045

STONE HEARTH OVEN • WS-FD-6045

VERY IMPORTANT!!
This oven is available in a left or right side burner configuration. Gas connections will be on the side of the oven as the radiant flame. Right side flame shown below. Electrical connections are always on the left.

A	Exhaust
B	Mantle
C	Flame Height Control Knob
D	Digital Controller
E	Forklift Here
	Electrical Connection (accessible from inside or outside)
F	Service Panel or Optional Storage Box
G	Gas Connection
	Must Be Left Removable for Service
	AIR INTAKE: Do Not Facade or Cover Over

PLAN VIEW

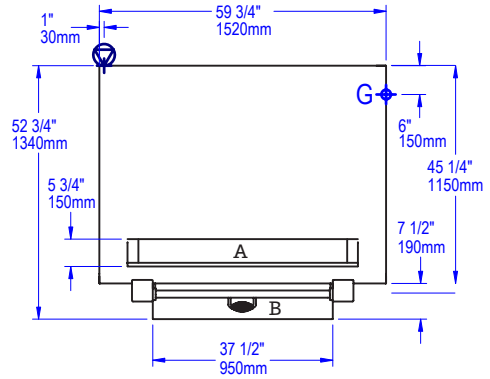

FRONT VIEW

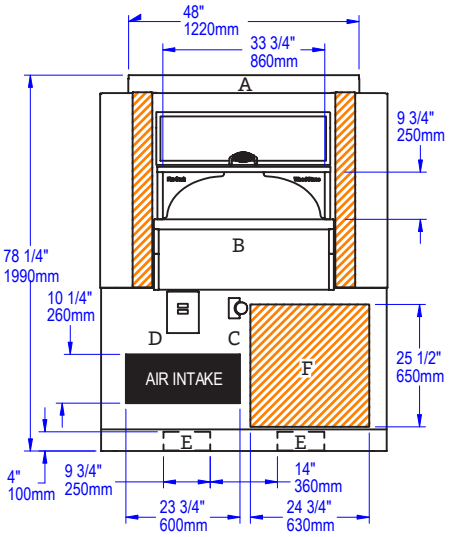

SIDE VIEW

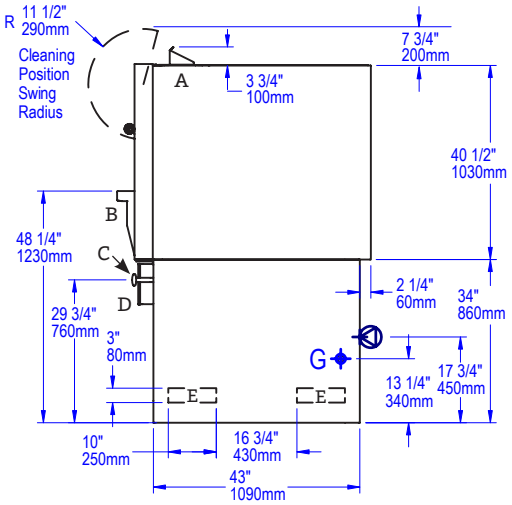

UTILITIES SPECIFICATIONS

GAS
Gas-Fired Only and Combination
¾ inch gas inlet (FNPT)
160,000 BTU/hr - Natural Gas (NG)
OR
160,000 BTU/hr - Propane (LP)

	BTU/hr Output Per Burner	
Radiant Flame Burner	115,000 NG	110,000 LP
IR Burner	45,000 NG	50,000 LP
Decorative Flame Adds	15,000 NG	15,000 LP

ELECTRICAL
Gas-Fired Only and Combination
120 VAC, 1.1 A, 50/60 Hz
Connection is on the left as shown.

IMPORTANT: Models with -W in the model number must be vented as a solid fuel appliance.

VENTING INFORMATION

The Fire Deck 6045 must be vented using a Listed Type 1 exhaust hood, or a hood constructed and installed in accordance with NFPA 96 and all relevant local and national codes. The oven must be vented in accordance with all relevant local and national codes, and in a manner acceptable to the authority having jurisdiction.

Ship Weight: 3,200 lbs / 1,451 kg

Intertek
ANSI Z83.11:2016 Ed.4
CSA 1.8:2016 Ed.4

Intertek
ANSI/NSF 4:2016

t. 360.650.1111
tf. 800.988.8103
f. 360.650.1166

Wood Stone Corporation
1801 W. Bakerview Rd.
Bellingham, WA 98226 USA
info@woodstone-corp.com
woodstone-corp.com

REVISED: SUMMER 2021

An ongoing program of product improvement may require us to change specifications without notice.

WOOD STONE

WARNING Cancer and Reproductive Harm - www.P65Warnings.ca.gov

WOOD STONE

FIRE DECK 8645
STONE HEARTH OVEN

Job Name	
Model	WS-FD-8645
Item#	

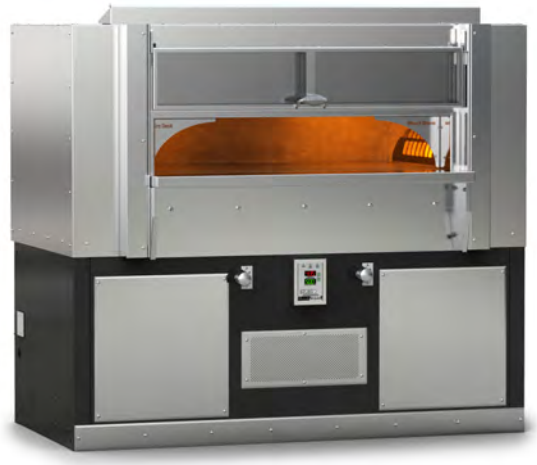

WS-FD-8645-RFG-LR-IR configuration shown.

The Fire Deck 8645 oven features a door opening 56 inches wide x 10 inches high, complemented by a glass heat shield and stainless steel mantle. The cooking area is 68 inches wide x 32 inches deep, resulting in a 15-square-foot cooking surface. A tensioned steel exoskeleton surrounding the hearth and dome perimeter ensures structural integrity and longevity. Wrapped in spun ceramic fiber insulation and requiring only a 1-inch side clearance to combustibles, the monolithic 4-inch thick cast-ceramic hearth and monolithic 4-inch thick dome rest on a black painted steel stand. The oven body front is finished with stainless steel; galvanized steel is used for the top, back and sides. The oven arrives completely assembled, ETL Listed, ready to install and is made in the USA. A set of optional rigging casters is available to aid in the initial installation. Information about custom finishes, tools and accessories can be found at: woodstone-corp.com.

HEARTH CAPACITY

8" pizzas:	20
10" pizzas:	14
12" pizzas:	10
16" pizzas:	6

Assuming 5-minute cook times, the approximate maximum hourly production capacity can be calculated by multiplying the above numbers by 12. Cook times will also vary depending on "style" of pizza. ***Note:*** *The addition of an optional decorative flame will decrease space and impact overall cooking capacity.*

GUIDE TO MODEL NUMBERS

	Underfloor IR Burner	Left Side Radiant Flame	Right Side Radiant Flame	Decorative Flame (-DF)	Wood Required	Combination	Natural Gas	Liquid Propane
WS-FD-8645-RFG-LR-IR	X	X	X	-DF			-NG	-LP
WS-FD-8645-RFG-L-IR-W	X	X			X	X	-NG	-LP
WS-FD-8645-RFG-R-IR-W	X		X		X	X	-NG	-LP
WS-FD-8645-W-IR	X				X		-NG	-LP
WS-FD-8645-W					X			

FUEL CONFIGURATIONS

GAS-FIRED ONLY: Configured to burn either natural gas (NG) or liquid propane (LP).*

- ❑ **RADIANT FLAME + UNDERFLOOR IR (RFG-IR):** Heated by an easily adjustable radiant flame located on both sides of the cooking chamber, along with a thermostatically controlled infrared burner which is mounted under the oven deck to ensure high production capacity.
- ❑ **DECORATIVE FLAME (-DF):** Provides an additional 15,000 BTU/hr flame at rear of cooking chamber for show. **Note:** Option will reduce available hearth capacity.

❑ **WOOD-FIRED (W):** Wood-fired only.

❑ **WOOD WITH GAS ASSIST (W-IR):** This wood-fired model is assisted by the additional BTUs of an Underfloor IR burner. **Note:** A wood fire is required with this configuration.

❑ **COMBINATION (-W):** Allows optional wood burning for ovens with gas burner configurations.* **Note:** Adding wood to an oven with an RFG burner will reduce available hearth capacity.

*Gas type must be specified at time of order.

Intertek
ANSI Z83.11:2016 Ed.4
CSA 1.8:2016 Ed.4

Intertek
ANSI/NSF 4:2016

t. 360.650.1111
tf. 800.988.8103
f. 360.650.1166

Wood Stone Corporation
1801 W. Bakerview Rd.
Bellingham, WA 98226 USA
info@woodstone-corp.com
woodstone-corp.com

REVISED: SUMMER 2021

An ongoing program of product improvement may require us to change specifications without notice.

WOOD STONE

WARNING Cancer and Reproductive Harm - www.P65Warnings.ca.gov

FIRE DECK 8645

STONE HEARTH OVEN • WS-FD-8645

A	Exhaust
B	Mantle
C	Flame Height Control Knob
D	Digital Controller
E	Forklift Here
	Electrical Connection (accessible from inside or outside)
F	Service Panel or Optional Storage Box
G	Gas Connection
	Must Be Left Removable for Service
	AIR INTAKE: Do Not Facade or Cover Over

PLAN VIEW

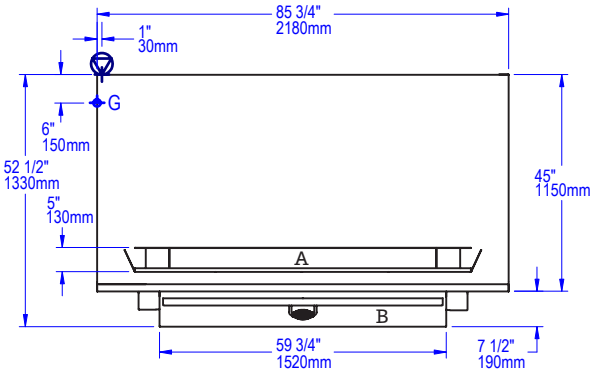

SIDE VIEW

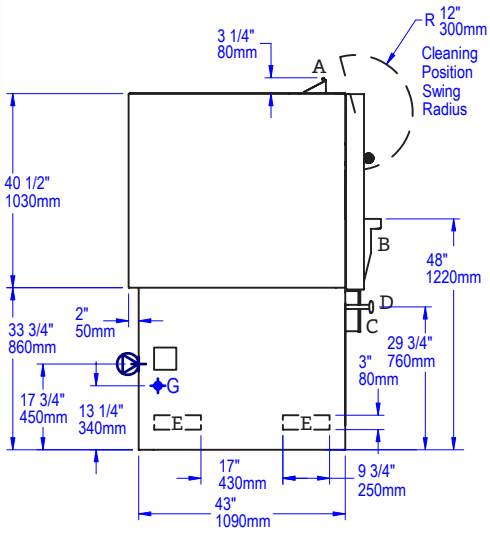

FRONT VIEW

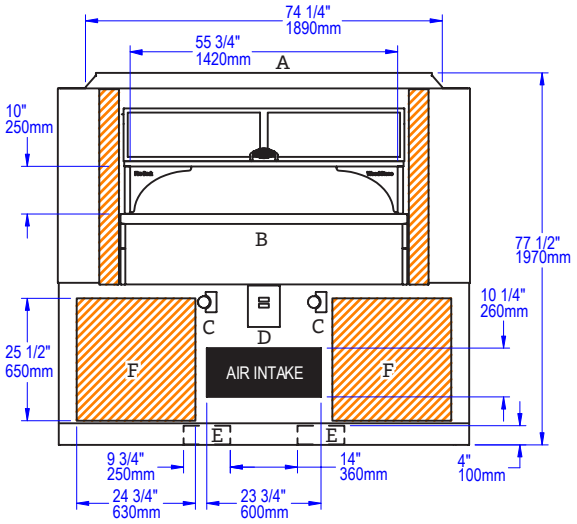

UTILITIES SPECIFICATIONS

GAS

Gas-Fired Only and Combination

¾ inch gas inlet (FNPT)

225,000 BTU/hr - Natural Gas (NG)

OR

200,000 BTU/hr - Propane (LP)

	BTU/hr Output Per Burner	
Radiant Flame Burner	90,000 NG	75,000 LP
IR Burner	45,000 NG	50,000 LP
Decorative Flame Adds	15,000 NG	15,000 LP

ELECTRICAL

Gas-Fired Only and Combination

120 VAC, 1.1 A, 50/60 Hz

Connection made on left side of oven as shown.

IMPORTANT: Models with -W in the model number must be vented as a solid fuel appliance.

VENTING INFORMATION

The Fire Deck 8645 must be vented using a Listed Type 1 exhaust hood, or a hood constructed and installed in accordance with NFPA 96 and all relevant local and national codes. The oven must be vented in accordance with all relevant local and national codes, and in a manner acceptable to the authority having jurisdiction.

Ship Weight: 4,350 lbs / 1,973 kg

Intertek
ANSI Z83.11:2016 Ed.4
CSA 1.8:2016 Ed.4

Intertek
ANSI/NSF 4:2016

t. 360.650.1111
tf. 800.988.8103
f. 360.650.1166

Wood Stone Corporation
1801 W. Bakerview Rd.
Bellingham, WA 98226 USA
info@woodstone-corp.com
woodstone-corp.com

REVISED: SUMMER 2021

An ongoing program of product improvement may require us to change specifications without notice.

WOOD STONE

WARNING Cancer and Reproductive Harm - www.P65Warnings.ca.gov

WOOD STONE

FIRE DECK 9660
STONE HEARTH OVEN

Job Name	
Model	WS-FD-9660
Item#	

WS-FD-9660-RFG-LR-IR configuration shown.

The Fire Deck 9660 oven features a door opening 54 inches wide x 10 inches high with a stainless steel mantle at the hearth. The cooking area is 75 inches wide x 44 inches deep, resulting in a 23-square-foot cooking surface. A tensioned steel exoskeleton surrounding the hearth and dome perimeter ensures structural integrity and longevity. Wrapped in spun ceramic fiber insulation and requiring only a 1-inch side clearance to combustibles, the monolithic cast-ceramic 4-inch thick hearth and monolithic 4-inch thick dome rest on a black painted steel stand. The oven body front, top, back and sides are finished with galvanized steel. The oven arrives completely assembled, ETL Listed, ready to install and is made in the USA. A set of optional rigging casters is available to aid in the initial installation. Information about custom finishes, tools and accessories can be found online at: woodstone-corp.com.

HEARTH CAPACITY

8" pizzas:	40
10" pizzas:	24
12" pizzas:	18
16" pizzas:	8

Assuming 5-minute cook times, the approximate maximum hourly production capacity can be calculated by multiplying the above numbers by 12. Cook times will also vary depending on "style" of pizza. ***Note:*** *The addition of an optional decorative flame will decrease space and impact overall cooking capacity.*

GUIDE TO MODEL NUMBERS

	Underfloor IR Burner	Left Side Radiant Flame	Right Side Radiant Flame	Decorative Flame (-DF)	Wood Required	Combination	Natural Gas	Liquid Propane
WS-FD-9660-RFG-LR-IR	X	X	X	-DF			-NG	-LP
WS-FD-9660-RFG-LR-IR-W	X	X	X			X	-NG	-LP
WS-FD-9660-RFG-L-IR-W	X	X			X	X	-NG	-LP
WS-FD-9660-RFG-R-IR-W	X		X		X	X	-NG	-LP
WS-FD-9660-W-IR	X				X		-NG	-LP
WS-FD-9660-W					X			

FUEL CONFIGURATIONS

GAS-FIRED ONLY: Configured to burn either natural gas (NG) or liquid propane (LP).*

- ❑ **RADIANT FLAME + UNDERFLOOR IR (RFG-IR):** Heated by an easily adjustable radiant flame located on both sides of the cooking chamber, along with a thermostatically controlled infrared burner which is mounted under the oven deck to ensure high production capacity.
- ❑ **DECORATIVE FLAME (-DF):** Provides an additional 15,000 BTU/hr flame at rear of cooking chamber for show.

❑ **WOOD-FIRED (W):** Wood-fired only.

❑ **WOOD WITH GAS ASSIST (W-IR):** This wood-fired model is assisted by the additional BTUs of an Underfloor IR burner. **Note:** A wood fire is required with this configuration.

❑ **COMBINATION (-W):** Allows optional wood burning for ovens with gas burner configurations.* **Note:** Adding wood to an oven with an RFG burner will reduce available hearth capacity.

❑ **COAL-FIRED (-CL): See Coal-Fired Oven (9660)**

*Gas type must be specified at time of order.

Intertek
ANSI Z83.11:2016 Ed.4
CSA 1.8:2016 Ed.4

Intertek
ANSI/NSF 4:2016

t. 360.650.1111
tf. 800.988.8103
f. 360.650.1166

Wood Stone Corporation
1801 W. Bakerview Rd.
Bellingham, WA 98226 USA
info@woodstone-corp.com
woodstone-corp.com

REVISED: SUMMER 2021

An ongoing program of product improvement may require us to change specifications without notice.

WOOD STONE

WARNING Cancer and Reproductive Harm - www.P65Warnings.ca.gov

FIRE DECK 9660

STONE HEARTH OVEN • WS-FD-9660

A	Flue Collar
B	Mantle
C	Flame Height Control Knob
D	Digital Controller
E	Forklift Here
	Electrical Connection (accessible from inside or outside)
F	Service Panel or Optional Storage Box
G	Gas Connection
	Must Be Left Removable for Service
	AIR INTAKE: Do Not Facade or Cover Over

PLAN VIEW

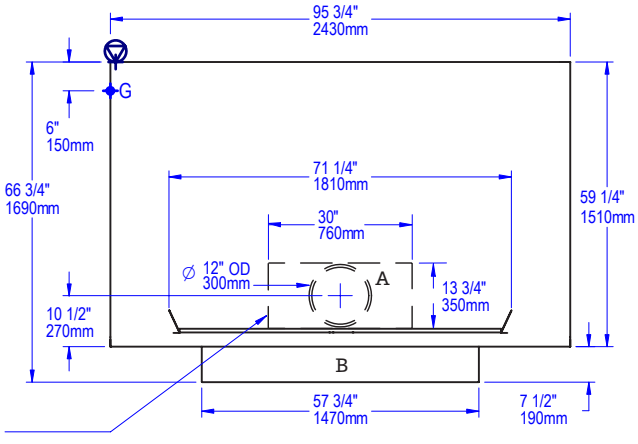

Dashed outline denotes flue opening used for hood installations (direct connect adapter removed)

SIDE VIEW

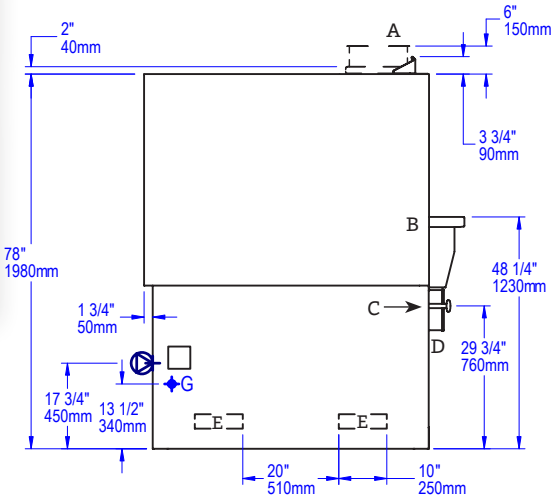

FRONT VIEW

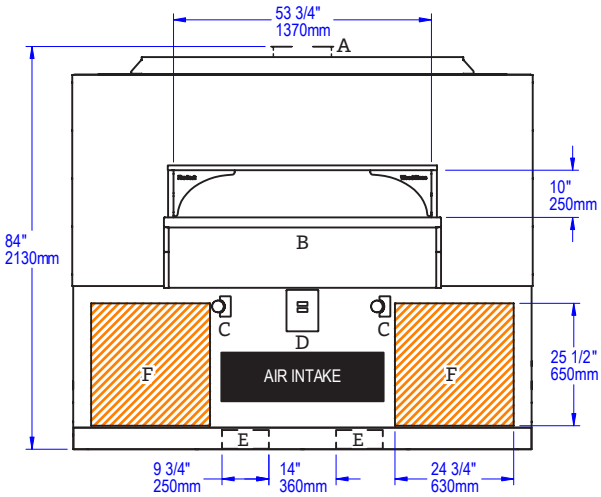

UTILITIES SPECIFICATIONS

GAS

Gas-Fired Only and Combination

1 inch gas inlet (FNPT)

350,000 BTU/hr - Natural Gas (NG)

OR

350,000 BTU/hr - Propane (LP)

	BTU/hr Output Per Burner	
Radiant Flame Burner	125,000 NG	125,000 LP
IR Burner	100,000 NG	100,000 LP
Decorative Flame Adds	15,000 NG	15,000 LP

ELECTRICAL

Gas-Fired Only and Combination

120 VAC, 2 A, 50/60 Hz

Connection made on left side of oven as shown

IMPORTANT: Models with -W or -CL in the model number must be vented as a solid fuel appliance.

VENTING INFORMATION

The Fire Deck 9660 can be direct connected to a power-ventilated, grease-rated chimney or be vented using a Listed Type 1 exhaust hood, or a hood constructed and installed in accordance with NFPA 96 and all relevant local and national codes. The oven must be vented in accordance with all relevant local and national codes, and in a manner acceptable to the authority having jurisdiction.

Ship Weight: 6,000 lbs / 2,722 kg

Intertek
ANSI Z83.11:2016 Ed.4
CSA 1.8:2016 Ed.4

Intertek
ANSI/NSF 4:2016

t. 360.650.1111
tf. 800.988.8103
f. 360.650.1166

Wood Stone Corporation
1801 W. Bakerview Rd.
Bellingham, WA 98226 USA
info@woodstone-corp.com
woodstone-corp.com

REVISED: SUMMER 2021

An ongoing program of product improvement may require us to change specifications without notice.

WOOD STONE

WARNING Cancer and Reproductive Harm - www.P65Warnings.ca.gov

WOOD STONE

FIRE DECK 9690
STONE HEARTH OVEN

Job Name	
Model	WS-FD-9690
Item#	

WS-FD-9690-RR-IR configuration shown.

The Fire Deck 9690 oven features a door opening 60 inches wide x 10 inches high with a stainless steel mantle at the hearth. The cooking area is 74 inches wide x 77 inches deep, resulting in a 39-square-foot cooking surface. A tensioned steel exoskeleton surrounding the hearth and dome perimeter ensure structural integrity and longevity. Wrapped in spun ceramic fiber insulation and requiring only a 1-inch side clearance to combustibles, the monolithic cast-ceramic 6-inch thick hearth and monolithic 4-inch thick dome rest on a black painted steel stand. The oven body front, top, back and sides are finished with galvanized steel. The oven arrives completely assembled, ETL Listed, ready to install and is made in the USA. A set of casters ship on the oven to assist with installation (remove once installed). Information about custom finishes, tools and accessories can be found online at: woodstone-corp.com.

HEARTH CAPACITY

8" pizzas:	60	16" pizzas:	16
10" pizzas:	40	18" pizzas:	12
12" pizzas:	36	20" pizzas:	9

Assuming 5-minute cook times, the approximate maximum hourly production capacity can be calculated by multiplying the above numbers by 12. Cook times will also vary depending on "style" of pizza. ***Note:*** *The addition of an optional decorative flame will decrease space and impact overall cooking capacity.*

GUIDE TO MODEL NUMBERS

	Underfloor IR Burner	Left Side Radiant Flame	Right Side Radiant Flame	Decorative Flame (-DF)	Wood Required	Combination	Natural Gas	Liquid Propane
WS-FD-9690-RFG-LL-IR	X	2		-DF			-NG	-LP
WS-FD-9690-RFG-LL-IR-W	X	2				X	-NG	-LP
WS-FD-9690-RFG-RR-IR	X		2	-DF			-NG	-LP
WS-FD-9690-RFG-RR-IR-W	X		2			X	-NG	-LP
WS-FD-9690-W-IR	X				X		-NG	-LP

Additional configurations are available. Please contact the factory.

FUEL CONFIGURATIONS

GAS-FIRED ONLY: Configured to burn either natural gas (NG) or liquid propane (LP).*

❑ **RADIANT FLAME + UNDERFLOOR IR (RFG-IR):** Heated by an adjustable radiant flame located on one or both sides of the cooking chamber, along with a thermostatically controlled infrared burner which is mounted under the oven deck to ensure high production capacity.

❑ **DECORATIVE FLAME (-DF):** Provides an additional 15,000 BTU/hr flame at rear of cooking chamber for show.

❑ **WOOD WITH GAS ASSIST (W-IR):** This wood-fired model is assisted by the additional BTUs of an Underfloor IR burner. **Note:** A wood fire is required with this configuration.

❑ **COMBINATION (-W):** Allows optional wood burning for ovens with gas burner configurations.* **Note:** Adding wood to an oven with an RFG burner will reduce available hearth capacity.

❑ **COAL-FIRED (-CL): See Coal-Fired Oven (9690)**

*Gas type must be specified at time of order.

Intertek
ANSI Z83.11:2016 Ed.4
CSA 1.8:2016 Ed.4

Intertek
ANSI/NSF 4:2016

t. 360.650.1111
tf. 800.988.8103
f. 360.650.1166

Wood Stone Corporation
1801 W. Bakerview Rd.
Bellingham, WA 98226 USA
info@woodstone-corp.com
woodstone-corp.com

REVISED: SUMMER 2021

An ongoing program of product improvement may require us to change specifications without notice.

WOOD STONE

WARNING Cancer and Reproductive Harm - www.P65Warnings.ca.gov

FIRE DECK 9690

STONE HEARTH OVEN • WS-FD-9690

VERY IMPORTANT!!
Oven is shipped with casters. Height with casters to the top of the flue collar is 87 3/4". Once the oven is in place the casters must be removed. Utility connections are made from underneath the oven. This view is showing a right-hand burner configuration. A left-hand burner configuration would mirror this configuration.

A	Flue Collar
B	Mantle
C	Flame Height Control Knob
D	Digital Controller
E	Forklift Here
	Electrical Connection
F	Service Panel or Optional Storage Box
G	Gas Connection
	Must Be Left Removable for Service
	AIR INTAKE: Do Not Facade or Cover Over

PLAN VIEW

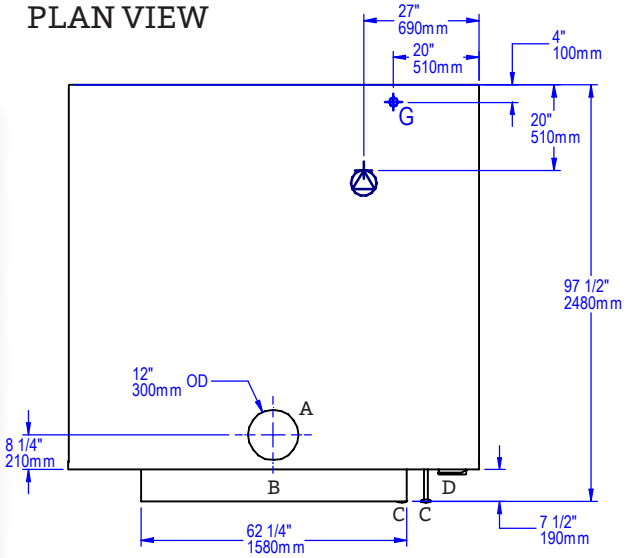

FRONT VIEW

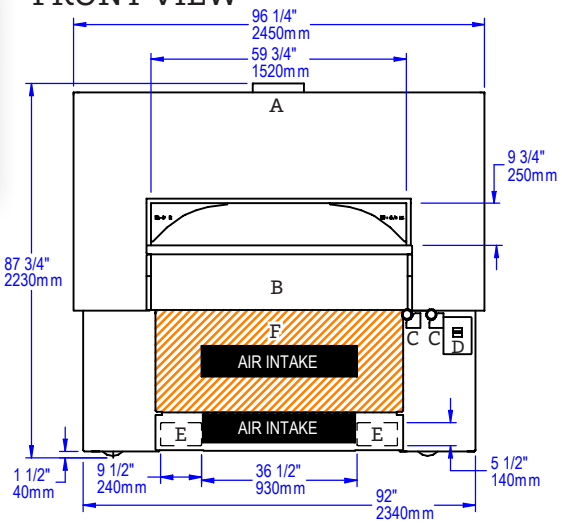

SIDE VIEW

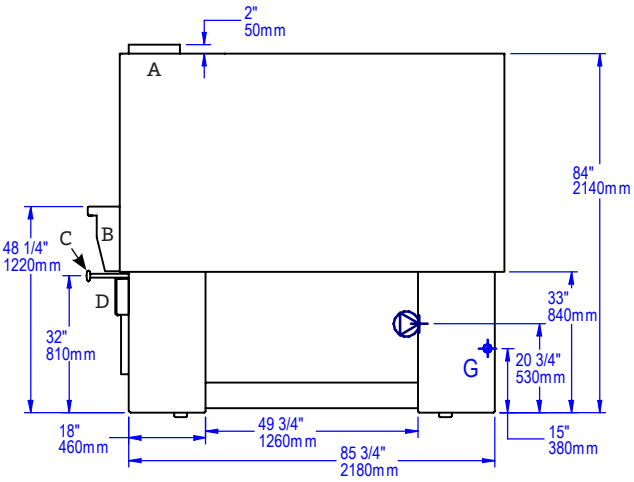

UTILITIES SPECIFICATIONS

GAS

Gas-Fired Only and Combination
1 inch gas inlet (FNPT)
343,000 BTU/hr - Natural Gas (NG) OR
365,000 BTU/hr - Propane (LP)

	BTU/hr Output Per Burner	
Radiant Flame Burner	123,000 NG	140,000 LP
IR Burner	100,000 NG	100,000 LP
Decorative Flame Adds	15,000 NG	15,000 LP

ELECTRICAL

Gas-Fired Only and Combination
120 VAC, 2 A, 50/60 Hz
Connection is made underneath the oven.

IMPORTANT: Models with -W or -CL in the model number must be vented as a solid fuel appliance.

VENTING INFORMATION

The Fire Deck 9690 can be direct connected to a power-ventilated, grease-rated chimney or be vented using a Listed Type 1 exhaust hood, or a hood constructed and installed in accordance with NFPA 96 and all relevant local and national codes. The oven must be vented in accordance with all relevant local and national codes, and in a manner acceptable to the authority having jurisdiction.

Ship Weight: 10,000 lbs / 4,536 kg

Intertek
ANSI Z83.11:2016 Ed.4
CSA 1.8:2016 Ed.4

Intertek
ANSI/NSF 4:2016

t. 360.650.1111
tf. 800.988.8103
f. 360.650.1166

Wood Stone Corporation
1801 W. Bakerview Rd.
Bellingham, WA 98226 USA
info@woodstone-corp.com
woodstone-corp.com

REVISED: SUMMER 2021

An ongoing program of product improvement may require us to change specifications without notice.

WOOD STONE

WARNING Cancer and Reproductive Harm - www.P65Warnings.ca.gov

WOOD STONE

FIRE DECK 11260
STONE HEARTH OVEN

Job Name	
Model	WS-FD-11260
Item#	

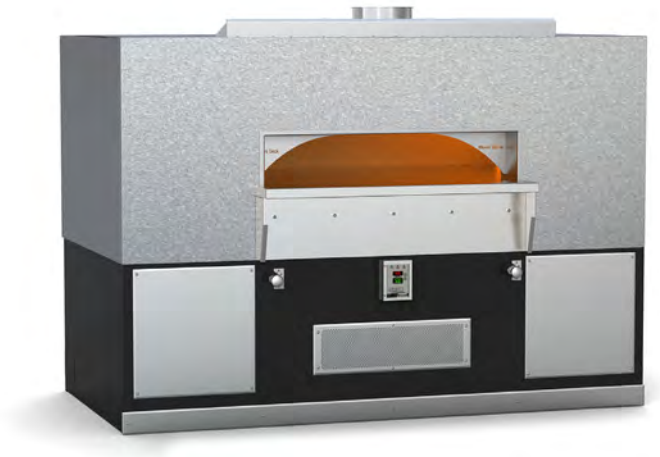

WS-FD-11260-RFG-LR-IR configuration shown.

The Fire Deck 11260 oven features a door opening 54 inches wide x 10 inches high with a stainless steel mantle at the hearth. The cooking area is 91 inches wide x 44 inches deep, resulting in a 28-square-foot cooking surface. A tensioned steel exoskeleton surrounding the hearth and dome perimeter ensures structural integrity and longevity. Wrapped in spun ceramic fiber insulation and requiring only a 1-inch side clearance to combustibles, the monolithic cast-ceramic 4-inch thick hearth and monolithic 4-inch thick dome rest on a black painted steel stand. The oven body front, top, back and sides are finished with galvanized steel. The oven arrives completely assembled, ETL Listed, ready to install and is made in the USA. A set of optional rigging casters is available to aid in the initial installation. Information about custom finishes, tools and accessories can be found online at: woodstone-corp.com.

HEARTH CAPACITY

8" pizzas:	50	16" pizzas:	10
10" pizzas:	32	18" pizzas:	8
12" pizzas:	21	20" pizzas:	6

Assuming 5-minute cook times, the approximate maximum hourly production capacity can be calculated by multiplying the above numbers by 12. Cook times will also vary depending on "style" of pizza. ***Note:*** *The addition of an optional decorative flame will decrease space and impact overall cooking capacity.*

GUIDE TO MODEL NUMBERS

	Underfloor IR Burner	Left Side Radiant Flame	Right Side Radiant Flame	Decorative Flame (-DF)	Wood Required	Combination	Natural Gas	Liquid Propane
WS-FD-11260-RFG-LR-IR	X	X	X	-DF			-NG	-LP
WS-FD-11260-RFG-LR-IR-W	X	X	X			X	-NG	-LP
WS-FD-11260-RFG-L-IR-W	X	X			X	X	-NG	-LP
WS-FD-11260-RFG-R-IR-W	X		X		X	X	-NG	-LP
WS-FD-11260-W-IR	X				X		-NG	-LP
WS-FD-11260-W					X			

FUEL CONFIGURATIONS

GAS-FIRED ONLY: Configured to burn either natural gas (NG) or liquid propane (LP).*

- ❑ **RADIANT FLAME + UNDERFLOOR IR (RFG-IR):** Heated by an adjustable radiant flame located on both sides of the cooking chamber, along with a thermostatically controlled infrared burner which is mounted under the oven deck to ensure high production capacity.
- ❑ **DECORATIVE FLAME (-DF):** Provides an additional 15,000 BTU/hr flame at rear of cooking chamber for show.

❑ **WOOD-FIRED ONLY (W):** Wood-fired only.

❑ **WOOD WITH GAS ASSIST (W-IR):** This wood-fired model is assisted by the additional BTUs of an Underfloor IR burner. **Note:** A wood fire is required with this configuration.

❑ **COMBINATION (-W):** Allows optional wood burning for ovens with gas burner configurations.* **Note:** Adding wood to an oven with an RFG burner will reduce available hearth capacity.

❑ **COAL-FIRED (-CL): See Coal-Fired Oven (11260)**

*Gas type must be specified at time of order.

Intertek
ANSI Z83.11:2016 Ed.4
CSA 1.8:2016 Ed.4

Intertek
ANSI/NSF 4:2016

t. 360.650.1111
tf. 800.988.8103
f. 360.650.1166

Wood Stone Corporation
1801 W. Bakerview Rd.
Bellingham, WA 98226 USA
info@woodstone-corp.com
woodstone-corp.com

REVISED: SUMMER 2021

An ongoing program of product improvement may require us to change specifications without notice.

WOOD STONE

WARNING Cancer and Reproductive Harm - www.P65Warnings.ca.gov

FIRE DECK 11260

STONE HEARTH OVEN • WS-FD-11260

A	Flue Collar
B	Mantle
C	Flame Height Control Knob
D	Digital Controller
E	Forklift Here
	Electrical Connection (accessible from inside or outside)
F	Service Panel or Optional Storage Box
G	Gas Connection
	Must Be Left Removable for Service
	AIR INTAKE: Do Not Facade or Cover Over

PLAN VIEW

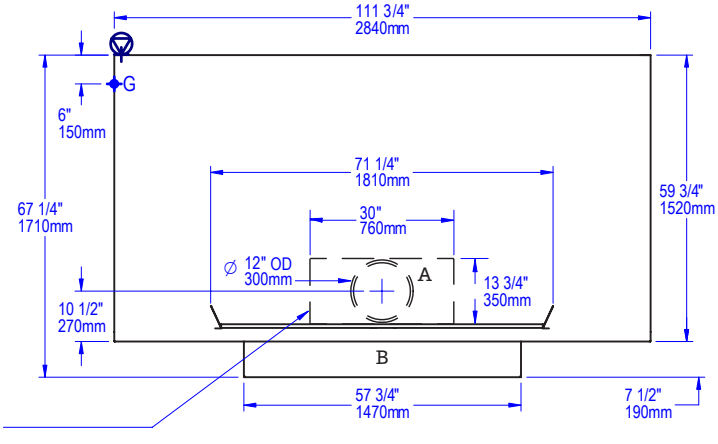

Dashed outline denotes flue opening used for hood installations (direct connect adapter removed)

SIDE VIEW

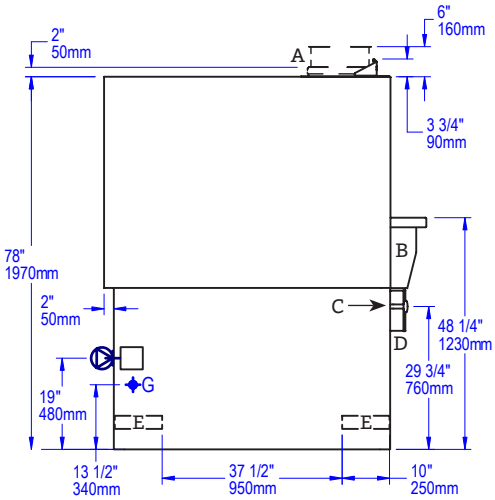

FRONT VIEW

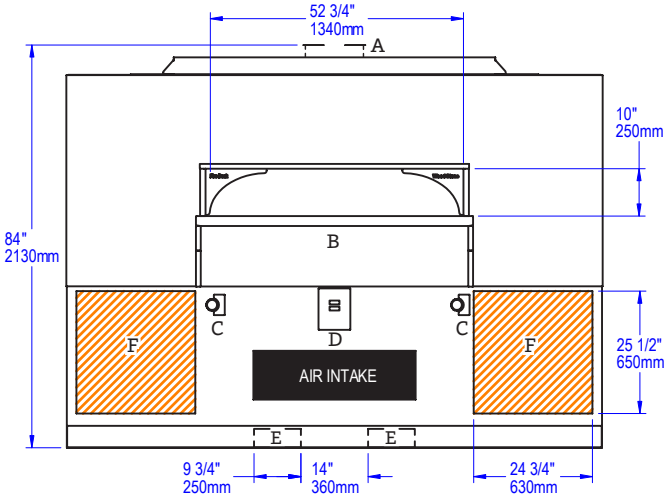

UTILITIES SPECIFICATIONS

GAS

Gas-Fired Only and Combination

1 inch gas inlet (FNPT)

350,000 BTU/hr - Natural Gas (NG)

OR

350,000 BTU/hr - Propane (LP)

	BTU/hr Output Per Burner	
Radiant Flame Burner	125,000 NG	125,000 LP
IR Burner	100,000 NG	100,000 LP
Decorative Flame Adds	15,000 NG	15,000 LP

ELECTRICAL

Gas-Fired Only and Combination

120 VAC, 2 A, 50/60 Hz

Connection is made on left side of oven as shown.

IMPORTANT: Models with -W or -CL in the model number must be vented as a solid fuel appliance.

VENTING INFORMATION

The Fire Deck 11260 can be direct connected to a power-ventilated, grease-rated chimney or be vented using a Listed Type 1 exhaust hood, or a hood constructed and installed in accordance with NFPA 96 and all relevant local and national codes. The oven must be vented in accordance with all relevant local and national codes, and in a manner acceptable to the authority having jurisdiction.

Ship Weight: 6,800 lbs / 3,084 kg

Intertek
ANSI Z83.11:2016 Ed.4
CSA 1.8:2016 Ed.4

Intertek
ANSI/NSF 4:2016

t. 360.650.1111
tf. 800.988.8103
f. 360.650.1166

Wood Stone Corporation
1801 W. Bakerview Rd.
Bellingham, WA 98226 USA
info@woodstone-corp.com
woodstone-corp.com

REVISED: SUMMER 2021

An ongoing program of product improvement may require us to change specifications without notice.

WOOD STONE

WARNING Cancer and Reproductive Harm - www.P65Warnings.ca.gov

WOOD STONE

FIRE DECK 11275
STONE HEARTH OVEN

Job Name	
Model	WS-FD-11275
Item#	

WS-FD-11275-RFG-RR-IR configuration shown.

The Fire Deck 11275 oven features a door opening 60 inches wide x 10 inches high with a stainless steel mantle at the hearth. The cooking area is 90 inches wide x 63 inches deep, resulting in a 39-square-foot cooking surface. A tensioned steel exoskeleton surrounding the hearth and dome perimeter ensures structural integrity and longevity. Wrapped in spun ceramic fiber insulation and requiring only a 1-inch side clearance to combustibles, the monolithic cast-ceramic 6-inch thick hearth and monolithic 4-inch thick dome rest on a black painted steel stand. The oven body front, top, back and sides are finished with galvanized steel. The oven arrives completely assembled, ETL Listed, ready to install and is made in the USA. A set of casters ship on the oven to assist with installation (remove once installed). Information about custom finishes, tools and accessories can be found online at: woodstone-corp.com.

HEARTH CAPACITY

8" pizzas:	67	16" pizzas:	15
10" pizzas:	50	18" pizzas:	12
12" pizzas:	35	20" pizzas:	12

Assuming 5-minute cook times, the approximate maximum hourly production capacity can be calculated by multiplying the above numbers by 12. Cook times will also vary depending on "style" of pizza. ***Note:*** *The addition of an optional decorative flame will decrease space and impact overall cooking capacity.*

GUIDE TO MODEL NUMBERS

	Underfloor IR Burner	Left Side Radiant Flame	Right Side Radiant Flame	Decorative Flame (-DF)	Wood Required	Combination	Natural Gas	Liquid Propane
WS-FD-11275-RFG-LL-IR	X	2		-DF			-NG	-LP
WS-FD-11275-RFG-LL-IR-W	X	2				X	-NG	-LP
WS-FD-11275-RFG-RR-IR	X		2	-DF			-NG	-LP
WS-FD-11275-RFG-RR-IR-W	X		2			X	-NG	-LP
WS-FD-11275-W-IR	X				X		-NG	-LP

Additional configurations are available. Please contact the factory.

FUEL CONFIGURATIONS

GAS-FIRED ONLY: Configured to burn either natural gas (NG) or liquid propane (LP).*

❑ **RADIANT FLAME + UNDERFLOOR IR (RFG-IR):** Heated by an adjustable radiant flame located on both sides of the cooking chamber, along with a thermostatically controlled infrared burner which is mounted under the oven deck to ensure high production capacity.

❑ **DECORATIVE FLAME (-DF):** Provides an additional 15,000 BTU/hr flame at rear of cooking chamber for show.

❑ **WOOD WITH GAS ASSIST (W-IR):** This wood-fired model is assisted by the additional BTUs of an Underfloor IR burner. **Note:** A wood fire is required with this configuration.

❑ **COMBINATION (-W):** Allows optional wood burning for ovens with gas burner configurations.* **Note:** Adding wood to an oven with an RFG burner will reduce available hearth capacity.

❑ **COAL-FIRED (-CL): See Coal-Fired Oven (11275)**

*Gas type must be specified at time of order.

Intertek
ANSI Z83.11:2016 Ed.4
CSA 1.8:2016 Ed.4

Intertek
ANSI/NSF 4:2016

t. 360.650.1111
tf. 800.988.8103
f. 360.650.1166

Wood Stone Corporation
1801 W. Bakerview Rd.
Bellingham, WA 98226 USA
info@woodstone-corp.com
woodstone-corp.com

REVISED: SUMMER 2021

An ongoing program of product improvement may require us to change specifications without notice.

WOOD STONE

WARNING Cancer and Reproductive Harm - www.P65Warnings.ca.gov

FIRE DECK 11275

STONE HEARTH OVEN • WS-FD-11275

VERY IMPORTANT!!
Oven is shipped with casters. Height with casters to the top of the flue collar is 87-3/4". Once the oven is in place the casters must be removed. Utility connections are made from underneath the oven. This view is showing a right-hand burner configuration. A left-hand burner configuration would mirror this configuration.

A	Flue Collar
B	Mantle
C	Flame Height Control Knob
D	Digital Controller
E	Forklift Here
	Electrical Connection
F	Service Panel or Optional Storage Box
G	Gas Connection
	Must Be Left Removable for Service
	AIR INTAKE: Do Not Facade or Cover Over

PLAN VIEW

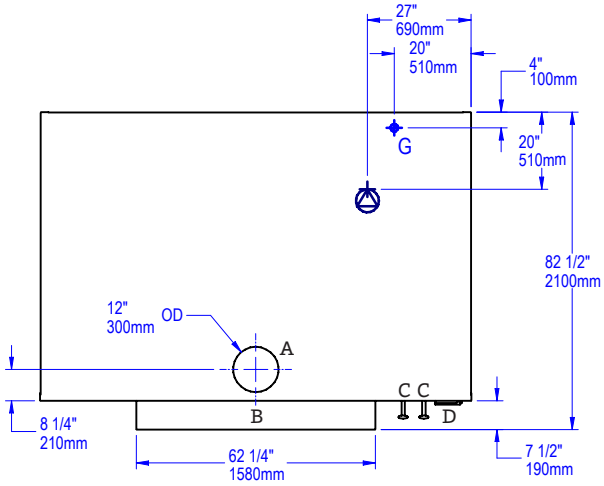

FRONT VIEW

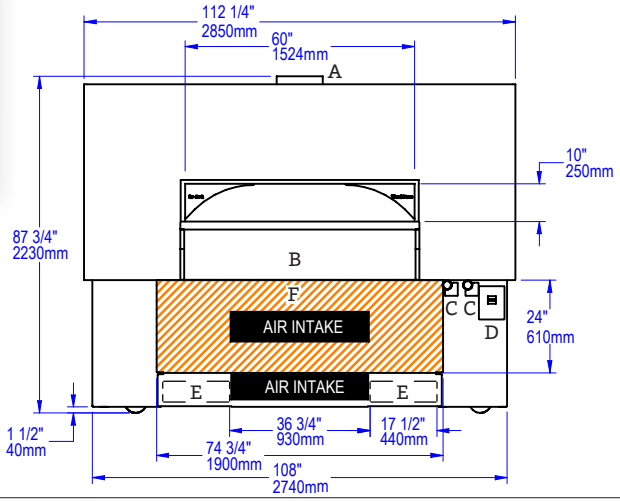

SIDE VIEW

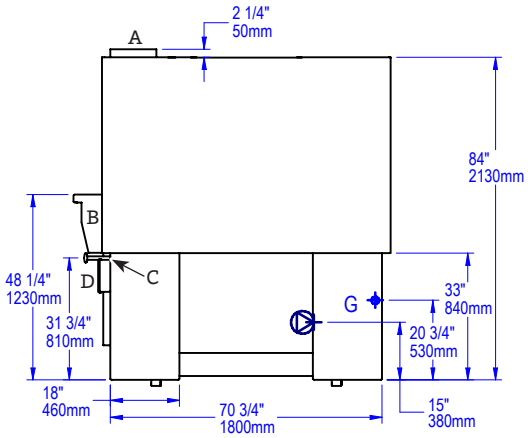

UTILITIES SPECIFICATIONS

GAS
Gas-Fired Only and Combination
1 inch gas inlet (FNPT)
315,000 BTU/hr - Natural Gas (NG)
OR
310,000 BTU/hr - Propane (LP)

	BTU/hr Output Per Burner	
Radiant Flame Burner	107,500 NG	105,000 LP
IR Burner	100,000 NG	100,000 LP
Decorative Flame Adds	15,000 NG	15,000 LP

ELECTRICAL
Gas-Fired Only and Combination
120 VAC, 2 A, 50/60 Hz
Connection is made underneath the oven.

IMPORTANT: Models with -W or -CL in the model number must be vented as a solid fuel appliance.

VENTING INFORMATION

The Fire Deck 11275 can be direct connected to a power-ventilated, grease-rated chimney or be vented using a Listed Type 1 exhaust hood, or a hood constructed and installed in accordance with NFPA 96 and all relevant local and national codes. The oven must be vented in accordance with all relevant local and national codes, and in a manner acceptable to the authority having jurisdiction.

Ship Weight: 9,500 lbs / 4,309 kg

Intertek
ANSI Z83.11:2016 Ed.4
CSA 1.8:2016 Ed.4

Intertek
ANSI/NSF 4:2016

t. 360.650.1111
tf. 800.988.8103
f. 360.650.1166

Wood Stone Corporation
1801 W. Bakerview Rd.
Bellingham, WA 98226 USA
info@woodstone-corp.com
woodstone-corp.com

REVISED: SUMMER 2021

An ongoing program of product improvement may require us to change specifications without notice.

WOOD STONE

WARNING Cancer and Reproductive Harm - www.P65Warnings.ca.gov

WOOD STONE

FIRE DECK 11290
STONE HEARTH OVEN

Job Name	
Model	WS-FD-11290
Item#	

WS-FD-11290-RFG-RR-IR configuration shown.

The Fire Deck 11290 oven features a door opening 60 inches wide x 10 inches high with a stainless steel mantle at the hearth. The cooking area is 90 inches wide x 78 inches deep, resulting in a 48-square-foot cooking surface. A tensioned steel exoskeleton surrounding the hearth and dome perimeter ensures structural integrity and longevity. Wrapped in spun ceramic fiber insulation and requiring only a 1-inch side clearance to combustibles, the monolithic cast-ceramic 6-inch thick hearth and monolithic 4-inch thick dome rest on a black painted steel stand. The oven body front, top, back and sides are finished with galvanized steel. The oven arrives completely assembled, ETL Listed, ready to install and is made in the USA. A set of casters ship on the oven to assist with installation (remove once installed). Information about custom finishes, tools and accessories can be found online at: woodstone-corp.com.

HEARTH CAPACITY

8" pizzas:	75	16" pizzas:	20
10" pizzas:	55	18" pizzas:	16
12" pizzas:	42	20" pizzas:	12

Assuming 5-minute cook times, the approximate maximum hourly production capacity can be calculated by multiplying the above numbers by 12. Cook times will also vary depending on "style" of pizza. ***Note:*** *The addition of an optional decorative flame will decrease space and impact overall cooking capacity.*

GUIDE TO MODEL NUMBERS

	Underfloor IR Burner	Left Side Radiant Flame	Right Side Radiant Flame	Decorative Flame (-DF)	Wood Required	Combination	Natural Gas	Liquid Propane
WS-FD-11290-RFG-LL-IR	X	2		-DF			-NG	-LP
WS-FD-11290-RFG-LL-IR-W	X	2				X	-NG	-LP
WS-FD-11290-RFG-RR-IR	X		2	-DF			-NG	-LP
WS-FD-11290-RFG-RR-IR-W	X		2			X	-NG	-LP
WS-FD-11290-W-IR	X				X		-NG	-LP

Additional configurations are available. Please contact the factory.

FUEL CONFIGURATIONS

GAS-FIRED ONLY: Configured to burn either natural gas (NG) or liquid propane (LP).*

❑ **RADIANT FLAME + UNDERFLOOR IR (RFG-IR):** Heated by an adjustable radiant flame located on both sides of the cooking chamber, along with a thermostatically controlled infrared burner which is mounted under the oven deck to ensure high production capacity.

❑ **DECORATIVE FLAME (-DF):** Provides an additional 15,000 BTU/hr flame at rear of cooking chamber for show.

❑ **WOOD WITH GAS ASSIST (W-IR):** This wood-fired model is assisted by the additional BTUs of an Underfloor IR burner. **Note:** A wood fire is required with this configuration.

❑ **COMBINATION (-W):** Allows optional wood burning for ovens with gas burner configurations.* **Note:** Adding wood to an oven with an RFG burner will reduce available hearth capacity.

❑ **COAL-FIRED (-CL): See Coal-Fired Oven (11290)**

*Gas type must be specified at time of order.

Intertek
ANSI Z83.11:2016 Ed.4
CSA 1.8:2016 Ed.4

Intertek
ANSI/NSF 4:2016

t. 360.650.1111
tf. 800.988.8103
f. 360.650.1166

Wood Stone Corporation
1801 W. Bakerview Rd.
Bellingham, WA 98226 USA
info@woodstone-corp.com
woodstone-corp.com

REVISED: SUMMER 2021

An ongoing program of product improvement may require us to change specifications without notice.

WOOD STONE

WARNING Cancer and Reproductive Harm - www.P65Warnings.ca.gov

FIRE DECK 11290

STONE HEARTH OVEN • WS-FD-11290

VERY IMPORTANT!!
Oven is shipped with casters. Height with casters to the top of the flue collar is 87-3/4". Once the oven is in place the casters must be removed. Utility connections are made from underneath the oven. This view is showing a right-hand burner configuration. A left-hand burner configuration would mirror this location.

A	Flue Collar
B	Mantle
C	Flame Height Control Knob
D	Digital Controller
E	Forklift Here
	Electrical Connection
F	Service Panel or Optional Storage Box
G	Gas Connection
	Must Be Left Removable for Service
	AIR INTAKE: Do Not Facade or Cover Over

PLAN VIEW

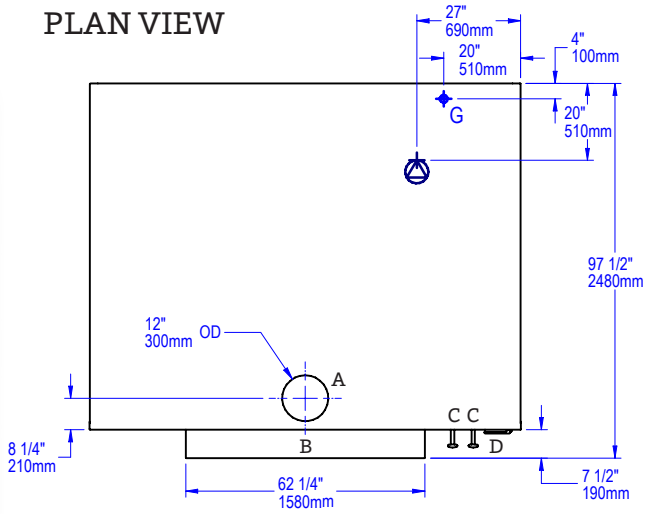

FRONT VIEW

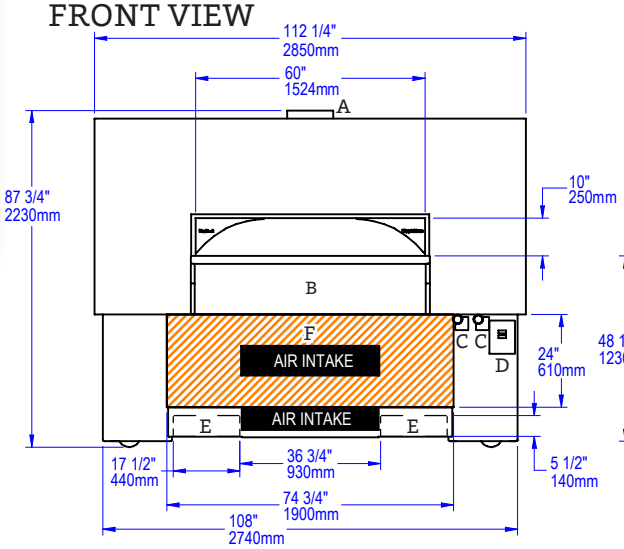

SIDE VIEW

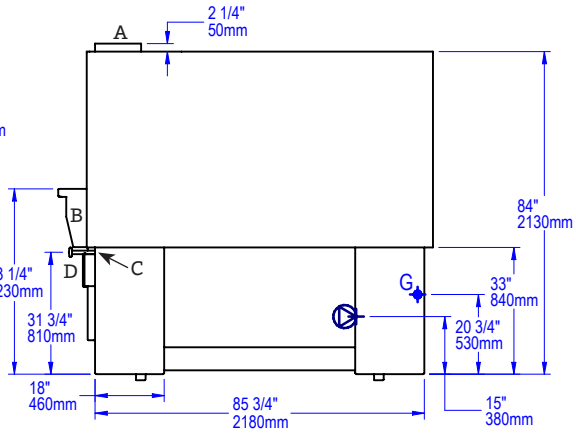

UTILITIES SPECIFICATIONS

GAS

Gas-Fired Only and Combination
1 inch gas inlet (FNPT)
343,000 BTU/hr - Natural Gas (NG)
OR
365,000 BTU/hr - Propane (LP)

	BTU/hr Output Per Burner	
Radiant Flame Burner	123,000 NG	140,000 LP
IR Burner	100,000 NG	100,000 LP
Decorative Flame Adds	15,000 NG	15,000 LP

ELECTRICAL

Gas-Fired Only and Combination
120 VAC, 2 A, 50/60 Hz
Connection is made underneath the oven.

IMPORTANT: Models with -W or -CL in the model number must be vented as a solid fuel appliance.

VENTING INFORMATION

The Fire Deck 11290 can be direct connected to a power-ventilated, grease-rated chimney or be vented using a Listed Type 1 exhaust hood, or a hood constructed and installed in accordance with NFPA 96 and all relevant local and national codes. The oven must be vented in accordance with all relevant local and national codes, and in a manner acceptable to the authority having jurisdiction.

Ship Weight: 11,500 lbs / 5,216 kg

Intertek
ANSI Z83.11:2016 Ed.4
CSA 1.8:2016 Ed.4

Intertek
ANSI/NSF 4:2016

t. 360.650.1111
tf. 800.988.8103
f. 360.650.1166

Wood Stone Corporation
1801 W. Bakerview Rd.
Bellingham, WA 98226 USA
info@woodstone-corp.com
woodstone-corp.com

REVISED: SUMMER 2021

An ongoing program of product improvement may require us to change specifications without notice.

WOOD STONE

WARNING Cancer and Reproductive Harm - www.P65Warnings.ca.gov

WOOD STONE

FIRE DECK SERIES STORAGE BOXES

WS-FD-8645 model shown.

FIRE DECK SERIES - STORAGE BOXES

Wood Stone's Storage Box is constructed of stainless steel. It slides easily into the oven stand and is easily removable for service access. The installed box rests on the oven stand, and the face of the box is flush to the base of the stand.

Storage boxes for the WS-FD-6045, 8645, 9660 and 11260 can accommodate the stainless steel Sheet Pan Rack for Storage Boxes. The unit slides into the Storage Box securely without additional hardware. The rack holds four standard 18 x 26" sheet pans.

Model	Item #	Height	Width	Depth
WS-FD-6045	000-FD-BOX	19.75" 502mm	20.5" 521mm	27.125" 689mm
WS-FD-8645				
WS-FD-9660				
WS-FD-11260				
For All Above	000-FD-RACK	Fits within Storage Box		

WS-FD-6045, 8645, 9660, 11260 Storage Box

Sheet Pan Rack for WS-FD-6045, 8645, 9660, 11260 Storage Boxes

WS-FD-9690 model shown.

Model	Item #	Height	Width	Depth
WS-FD-9690	000-FD-BOX-9690-SS	19.75" 502mm	54" 1372mm	17.875" 454mm
WS-CS-90-112				
WS-FD-11275	000-FD-BOX-11290-SS		70" 1778mm	
WS-FD-11290				

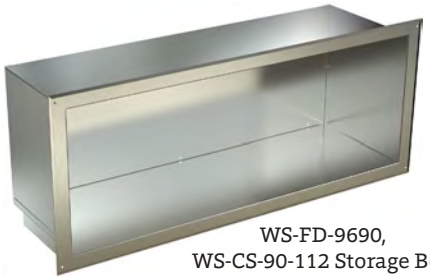

WS-FD-9690, WS-CS-90-112 Storage Box

WS-FD-11275, 11290 Storage Box not shown.

t. 360.650.1111
tf. 800.988.8103
f. 360.650.1166

Wood Stone Corporation
1801 W. Bakerview Rd.
Bellingham, WA 98226 USA
info@woodstone-corp.com
woodstone-corp.com

REVISED: SUMMER 2021

An ongoing program of product improvement may require us to change specifications without notice.

WOOD STONE

WARNING Cancer and Reproductive Harm - www.P65Warnings.ca.gov

FIRE DECK SERIES OVEN MANTLES

WOOD STONE

FIRE DECK SERIES - OVEN MANTLES

The Oven Mantle extends the working surface at the doorway of the oven, providing a staging area for dishes going into the oven or a holding area for cooked items awaiting service.

Fire Decks come standard with a stainless steel (S/S) mantle and S/S mantle bracket. Fire Deck ovens can also be ordered with the optional black granite mantle and/or powder coat mantle bracket.

Another alternative is to supply your own appropriate mantle stone, utilizing the S/S mantle bracket or the optional powder coat mantle bracket.

If you are planning to incorporate your Fire Deck Series oven into a kitchen design by applying facade materials, please visit the Facade Tutorials section on the Wood Stone website.

WS-FD-9660 model with stainless steel Mantle and stainless steel Mantle Bracket shown.

Mantle: S/S

Mantle Bracket: S/S

Mantle: Black Granite

Mantle Bracket: S/S

Mantle: S/S

Mantle Bracket:
Black Powder Coat Finish

Mantle: Black Granite

Mantle Bracket:
Black Powder Coat Finish

DEBRIS MANTLE

Wood Stone's Debris Mantle helps you maintain a clean cooking surface by offering a convenient receptacle to collect excess buildup on the floor. With a quick sweep using your Wood Stone brush, you can now keep the debris to a minimum and your radiant burners clear. Slide the trays out for easy emptying and wash them in any standard

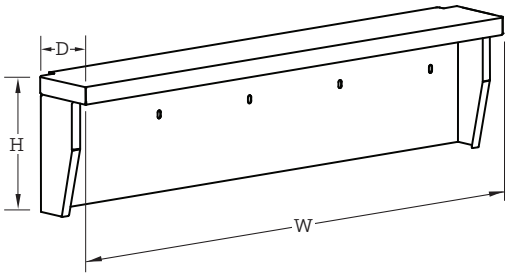

	Mantle Dimensions		
Fire Deck Series	H	W	D
WS-FD-6045	14.75"	37.5"	7.5"
WS-FD-8645		59.75"	
WS-FD/FA-9660	14.75"	57.75"	
WS-FD-11260			
WS-FD-9690	15.25"	62.25"	
WS-FD-11275			
WS-FD-11290			

t. 360.650.1111
tf. 800.988.8103
f. 360.650.1166

Wood Stone Corporation
1801 W. Bakerview Rd.
Bellingham, WA 98226 USA
info@woodstone-corp.com
woodstone-corp.com

REVISED: SUMMER 2021

An ongoing program of product improvement may require us to change specifications without notice.

WOOD STONE

DOUBLE DOOR OPTION

Wood Stone offers Double Door options on Fire Deck Series and Mountain Series ovens.

With the Double Door option, access is available from both the front and the rear of select Fire Deck ovens. Adding a second doorway can change the efficiency and production capacity of your oven. For more information, contact the Wood Stone Culinary Team.

On Fire Deck 9660 and larger models, the second doorway can mirror the size of the "control door" (where the oven controls are located). Alternatively, a smaller 30" second operational doorway is available to reduce heat loss.

Illustrated here is a multiple doorway configuration for a number of Fire Deck Series ovens. The gray mantle represents the control door side. The yellow mantle represents a vented, functioning second doorway with mantle. The orange bars represent radiant burner positions for gas-fired configurations.

With multiple doorways, each must be vented in accordance with all relevant local and national codes, and in a manner acceptable to the authority having jurisdiction.

WS-FD-8645-RFG-LR-IR
with Double Door shown.

WS-FD-9660-RFG-LR-IR
with Double Door shown.

WS-FD-9690-RFG-LL-IR
with Double Door shown.

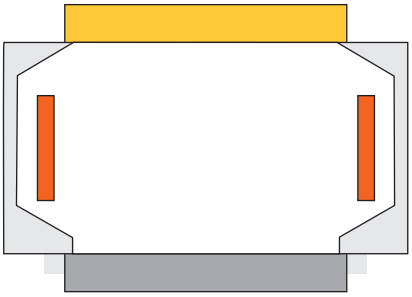

Standard configuration of
WS-FD-8645-DD model

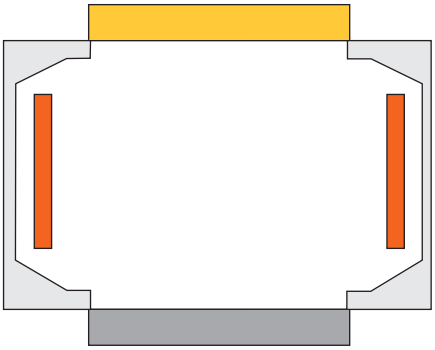

Standard configuration of
WS-FD-9660-DD and FD-11260-DD models

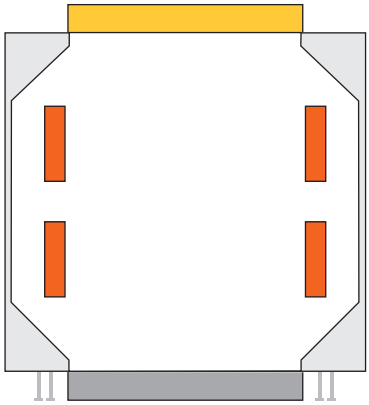

LL or RR burner positions shown.
WS-FD-9690-DD, FD-11275-DD &
FD-11290-DD models

t. 360.650.1111
tf. 800.988.8103
f. 360.650.1166

Wood Stone Corporation
1801 W. Bakerview Rd.
Bellingham, WA 98226 USA
info@woodstone-corp.com
woodstone-corp.com

REVISED: SUMMER 2021

An ongoing program of product improvement may require us to change specifications without notice.

WARNING Cancer and Reproductive Harm - www.P65Warnings.ca.gov

FIRE DECK SERIES DECORATIVE FLAME

WOOD STONE

DECORATIVE FLAME

Add more beautiful visual flare to your Fire Deck oven with the optional Decorative Flame Burner. Decorative Flames are available for all Fire Deck sizes* and are available in natural gas and propane configurations.

Standard Fire Deck Series models are available in a variety of burner and fuel configurations. The standard unit has flame locations on one or both side ends of the unit, as well as a thermostatically controlled Underfloor IR burner beneath the oven deck. The Decorative Flame burner is located in the center rear of the oven, and adds a 15,000 BTU/hr direct front-facing visual flame. **Note:** Adding a Decorative Flame to an oven will slightly reduce available hearth capacity.

The Decorative Flame measures 20" long and 5" deep. The Decorative Flame turns on automatically when the oven controller is turned on.

Make sure to add the Decorative Flame to your Fire Deck 6045 or 8645 at time of order as they must be fitted at the factory.

*Decorative Flame Burners are not available on coal-fired, wood-fired or Double Door ovens. They are available on Fire Deck ovens with an optional Viewing Window.

WS-FD-8645-RFG-LR-IR-DF model shown.

WS-FD-9660-RFG-LR-IR-DF model shown.

t. 360.650.1111
tf. 800.988.8103
f. 360.650.1166

Wood Stone Corporation
1801 W. Bakerview Rd.
Bellingham, WA 98226 USA
info@woodstone-corp.com
woodstone-corp.com

REVISED: SUMMER 2021

An ongoing program of product improvement may require us to change specifications without notice.

WOOD STONE

 WARNING Cancer and Reproductive Harm - www.P65Warnings.ca.gov

WOOD STONE

MT. CHUCKANUT 4'
STONE HEARTH OVEN

Job Name	
Model	WS-MS-4
Item#	

WS-MS-4 model with optional Stainless Steel Mantle shown.

The Mt. Chuckanut 4' oven features a door opening 19.75 inches wide x 10 inches high. The oven floor diameter is 37 inches, resulting in a 7-square-foot cooking surface. A tensioned steel exoskeleton surrounding the hearth and dome perimeter ensures structural integrity and longevity. Wrapped in spun ceramic fiber insulation and requiring only a 1-inch side clearance to combustibles, the monolithic 4-inch thick cast-ceramic hearth and monolithic 4-inch thick dome rest on an open black painted steel stand. The oven body is finished with galvanized steel and a stainless steel service panel is provided. The oven arrives completely assembled, ETL Listed, ready to install and is made in the USA. Information about custom finishes, tools and accessories can be found online at: woodstone-corp.com.

HEARTH CAPACITY

8" pizzas:	8–10
10" pizzas:	5–6
12" pizzas:	4
16" pizzas:	1–2

Assuming 5-minute cook times, the approximate maximum hourly production capacity can be calculated by multiplying the above numbers by 12. Cook times will also vary depending on "style" of pizza.

GUIDE TO MODEL NUMBERS

	Radiant Flame	Underfloor IR Burner	Wood Required	Combination	Natural Gas BTU/hr	Liquid Propane BTU/hr
WS-MS-4-RFG	X				-NG 72,000	-LP 60,000
WS-MS-4-RFG-W	X			X	-NG 68,000	-LP 60,000
WS-MS-4-RFG-IR	X	X			-NG 125,000	-LP 110,000
WS-MS-4-RFG-IR-W	X	X		X	-NG 115,000	-LP 102,000
WS-MS-4-W-IR		X	X		-NG 52,000	-LP 53,000
WS-MS-4-W			X			

FUEL CONFIGURATIONS

GAS-FIRED ONLY: Configured to burn either natural gas (NG) or liquid propane (LP).*

❑ **RADIANT FLAME (RFG):** Heated by an easily adjustable radiant flame (72,000 BTU/hr max. NG) located in the rear of the cooking chamber. User control ensures the ability to balance the oven's radiated top heat with the heat being conducted and radiated from the floor.

❑ **RADIANT FLAME + UNDERFLOOR IR (RFG-IR):** In addition to the radiant flame, a 52,000 BTU/hr (NG) thermostatically controlled infrared burner is mounted under the oven deck to ensure high production capacity with no heat recovery issues.

❑ **WOOD-FIRED (W):** Wood-fired only.

❑ **WOOD WITH GAS ASSIST (W-IR):** This wood-fired model is assisted by the additional BTUs of an Underfloor IR burner. **Note:** A wood fire is required with this configuration.

❑ **COMBINATION (-W):** Allows optional wood burning for ovens with gas burner configurations.* **Note:** Adding wood to an oven with an RFG burner will reduce available hearth capacity.

*Gas type must be specified at time of order.

Intertek
ANSI Z83.11:2016 Ed.4
CSA 1.8:2016 Ed.4

Intertek
ANSI/NSF 4:2016

t. 360.650.1111
tf. 800.988.8103
f. 360.650.1166

Wood Stone Corporation
1801 W. Bakerview Rd.
Bellingham, WA 98226 USA
info@woodstone-corp.com
woodstone-corp.com

REVISED: SUMMER 2021

An ongoing program of product improvement may require us to change specifications without notice.

WOOD STONE

WARNING Cancer and Reproductive Harm - www.P65Warnings.ca.gov

MT. CHUCKANUT 4'

STONE HEARTH OVEN • WS-MS-4

A	Flue Collar
B	Mantle
C	Flame Height Control Knob
D	Digital Controller
E	Forklift Here
	Electrical Connection
F	Service Panel or Optional Storage Box
G	Gas Connection
	Must Be Left Removable for Service
	AIR INTAKE: Do Not Facade or Cover Over

PLAN VIEW

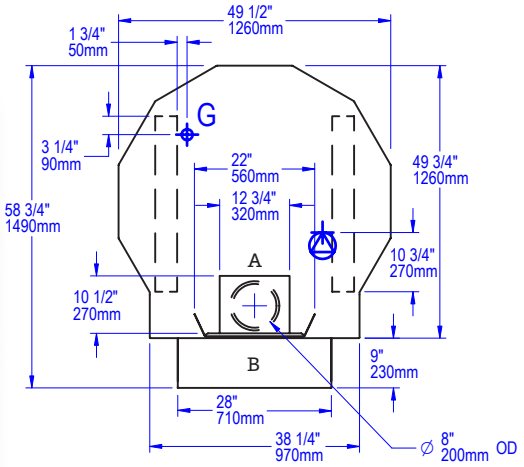

FACADE INFORMATION

- All facades or enclosures are by others.
- All MS ovens require a 1" side clearance and 6" top clearance to combustible construction. Any construction 6" to either side of the oven doorway and above must be non-combustible.
- Any facade or enclosure below the mantle of Gas-Fired or Combination ovens must allow for:
  - Unobstructed access for removal of service/intake panel.
  - Easy access to all controls.
  - Sufficient combustion air for gas burners; see Installation and Operation Manual for details.

FRONT VIEW

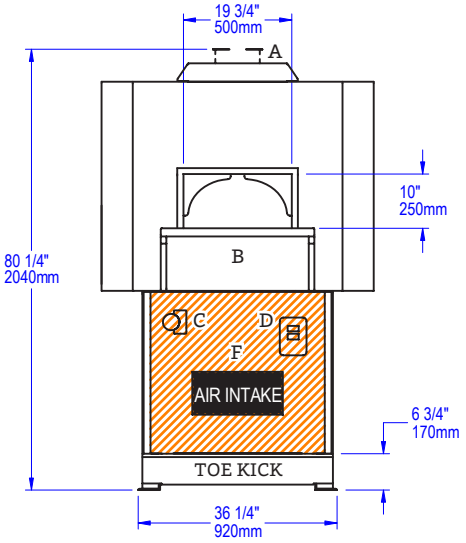

SIDE VIEW

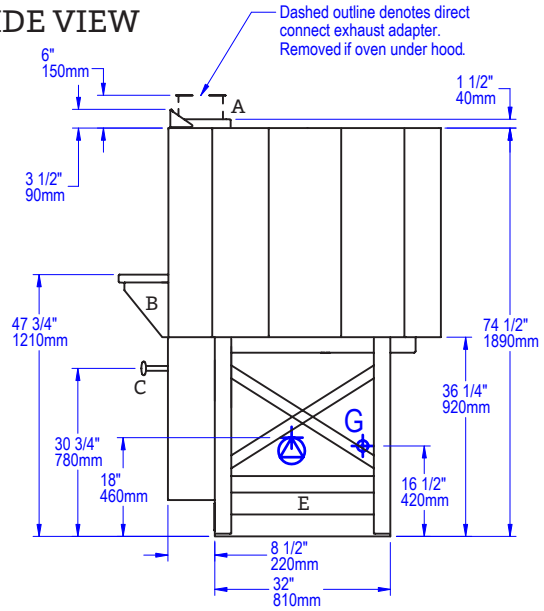

UTILITIES SPECIFICATIONS

GAS

¾ inch gas inlet (FNPT)

BTU/hr Requirements

See table on previous page

ELECTRICAL

Gas-Fired Only & Combination

120 VAC, 1.1 A, 50/60 Hz

Connection made beneath oven as shown.

Wood-Fired Only

120 VAC, 2 A, 50/60 Hz

Connection made to readout box.

VENTING INFORMATION

The Mt. Chuckanut comes with an optional round 8" O.D. collar flue adapter for direct connection to a power-ventilated, grease-rated chimney or, without the flue adapter, can be vented with a Listed Type 1 exhaust hood, or one constructed in accordance with NFPA 96 and all relevant local and national codes. The oven must be vented in accordance with all relevant local and national codes, and in a manner acceptable to the authority having jurisdiction.

Ship Weight: 2,400 lbs / 1,089 kg

Intertek
ANSI Z83.11:2016 Ed.4
CSA 1.8:2016 Ed.4

Intertek
ANSI/NSF 4:2016

t. 360.650.1111
tf. 800.988.8103
f. 360.650.1166

Wood Stone Corporation
1801 W. Bakerview Rd.
Bellingham, WA 98226 USA
info@woodstone-corp.com
woodstone-corp.com

REVISED: SUMMER 2021

An ongoing program of product improvement may require us to change specifications without notice.

WOOD STONE

WARNING Cancer and Reproductive Harm - www.P65Warnings.ca.gov

WOOD STONE

MT. ADAMS 5'
STONE HEARTH OVEN

Job Name	
Model	WS-MS-5
Item#	

WS-MS-5 model with optional Stainless Steel Mantle shown.

The Mt. Adams 5' oven features a door opening 29.75 inches wide x 10 inches high. The oven floor diameter is 52 inches, resulting in a 15-square-foot cooking surface. A tensioned steel exoskeleton surrounding the hearth and dome perimeter ensures structural integrity and longevity. Wrapped in spun ceramic fiber insulation and requiring only a 1-inch side clearance to combustibles, the monolithic 4-inch thick cast-ceramic hearth and monolithic 4-inch thick dome rest on an open black painted steel stand. The oven body is finished with galvanized steel and a stainless steel service panel is provided. The oven arrives completely assembled, ETL Listed, ready to install and is made in the USA. Information about custom finishes, tools and accessories can be found online at: woodstone-corp.com.

HEARTH CAPACITY

8" pizzas:	12–16
10" pizzas:	10–12
12" pizzas:	10
16" pizzas:	5

Assuming 5-minute cook times, the approximate maximum hourly production capacity can be calculated by multiplying the above numbers by 12. Cook times will also vary depending on "style" of pizza.

GUIDE TO MODEL NUMBERS

	Radiant Flame	Underfloor IR Burner	Wood Required	Combination	Natural Gas BTU/hr	Liquid Propane BTU/hr
WS-MS-5-RFG	X				-NG 105,000	-LP 94,000
WS-MS-5-RFG-W	X			X	-NG 105,000	-LP 94,000
WS-MS-5-RFG-IR	X	X			-NG 188,000	-LP 159,000
WS-MS-5-RFG-IR-W	X	X		X	-NG 188,000	-LP 159,000
WS-MS-5-W-IR		X	X		-NG 83,000	-LP 65,000
WS-MS-5-W			X			

FUEL CONFIGURATIONS

GAS-FIRED ONLY: Configured to burn either natural gas (NG) or liquid propane (LP).*

❑ **RADIANT FLAME (RFG):** Heated by an easily adjustable radiant flame (105,000 BTU/hr max. NG) located in the rear of the cooking chamber. User control ensures the ability to balance the oven's radiated top heat with the heat being conducted and radiated from the floor.

❑ **RADIANT FLAME + UNDERFLOOR IR (RFG-IR):** In addition to the radiant flame, a 83,000 BTU/hr (NG) thermostatically controlled infrared burner is mounted under the oven deck to ensure high production capacity with no heat recovery issues.

❑ **WOOD-FIRED (W):** Wood-fired only.

❑ **WOOD WITH GAS ASSIST (W-IR):** This wood-fired model is assisted by the additional BTUs of an Underfloor IR burner. **Note:** A wood fire is required with this configuration.

❑ **COMBINATION (-W):** Allows optional wood burning for ovens with gas burner configurations.* **Note:** Adding wood to an oven with an RFG burner will reduce available hearth capacity.

*Gas type must be specified at time of order.

Intertek
ANSI Z83.11:2016 Ed.4
CSA 1.8:2016 Ed.4

Intertek
ANSI/NSF 4:2016

t. 360.650.1111
tf. 800.988.8103
f. 360.650.1166

Wood Stone Corporation
1801 W. Bakerview Rd.
Bellingham, WA 98226 USA
info@woodstone-corp.com
woodstone-corp.com

REVISED: SUMMER 2021

An ongoing program of product improvement may require us to change specifications without notice.

WOOD STONE

WARNING Cancer and Reproductive Harm - www.P65Warnings.ca.gov

MT. ADAMS 5'
STONE HEARTH OVEN • WS-MS-5

A	Flue Collar
B	Mantle
C	Flame Height Control Knob
D	Digital Controller
E	Forklift Here
	Electrical Connection
F	Service Panel or Optional Storage Box
G	Gas Connection
	Must Be Left Removable for Service
	AIR INTAKE: Do Not Facade or Cover Over

PLAN VIEW

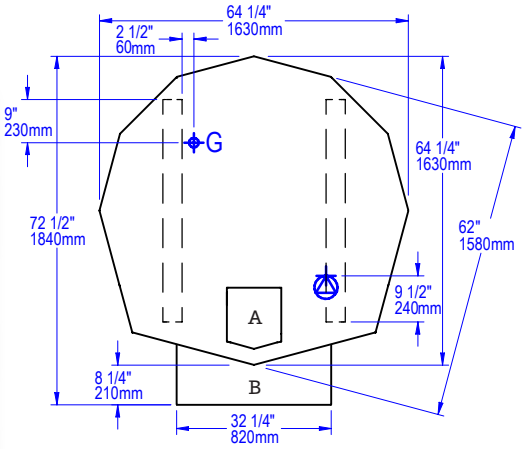

FACADE INFORMATION

- All facades or enclosures are by others.
- All MS ovens require a 1" side clearance and 6" top clearance to combustible construction. Any construction 6" to either side of the oven doorway and above must be non-combustible.
- Any facade or enclosure below the mantle of Gas-Fired or Combination ovens must allow for:
  - Unobstructed access for removal of service/intake panel.
  - Easy access to all controls.
  - Sufficient combustion air for gas burners; see Installation and Operation Manual for details.

FRONT VIEW

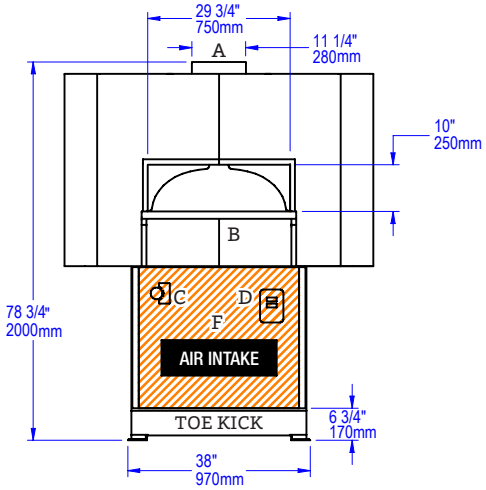

SIDE VIEW

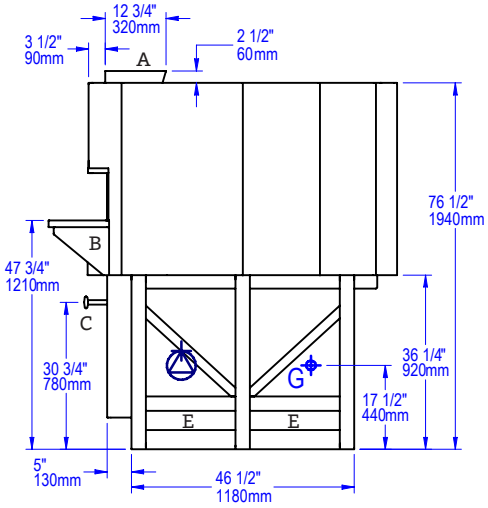

UTILITIES SPECIFICATIONS

GAS
¾ inch gas inlet (FNPT)

BTU/hr Requirements
See table on previous page

ELECTRICAL
Gas-Fired Only & Combination
120 VAC, 1.1 A, 50/60 Hz
Connection made beneath oven as shown.

Wood-Fired Only
120 VAC, 2 A, 50/60 Hz
Connection made to readout box.

VENTING INFORMATION

The Mt. Adams can be direct connected to a power-ventilated, grease-rated chimney or can be vented with a Listed Type 1 exhaust hood, or one constructed in accordance with NFPA 96 and all relevant local and national codes. The oven must be vented in accordance with all relevant local and national codes, and in a manner acceptable to the authority having jurisdiction.

Note: A 10" ID flue adapter is included with ovens ordered without a hood to facilitate connection to a round duct (adds 3" to height).

Ship Weight: 3,600 lbs / 1,633 kg

Intertek
ANSI Z83.11:2016 Ed.4
CSA 1.8:2016 Ed.4

Intertek
ANSI/NSF 4:2016

t. 360.650.1111
tf. 800.988.8103
f. 360.650.1166

Wood Stone Corporation
1801 W. Bakerview Rd.
Bellingham, WA 98226 USA
info@woodstone-corp.com
woodstone-corp.com

REVISED: SUMMER 2021

An ongoing program of product improvement may require us to change specifications without notice.

WOOD STONE

WARNING Cancer and Reproductive Harm - www.P65Warnings.ca.gov

WOOD STONE

MT. BAKER 6'
STONE HEARTH OVEN

Job Name	
Model	WS-MS-6
Item#	

WS-MS-6 model with optional Stainless Steel Mantle shown.

The Mt. Baker 6' oven features a door opening 36 inches wide x 10 inches high. The oven floor diameter is 62 inches, resulting in a 22-square-foot cooking surface. A tensioned steel exoskeleton surrounding the hearth and dome perimeter ensures structural integrity and longevity. Wrapped in spun ceramic fiber insulation and requiring only a 1-inch side clearance to combustibles, the monolithic 4-inch thick cast-ceramic hearth and monolithic 4-inch thick dome rest on an open black painted steel stand. The oven body is finished with galvanized steel and a stainless steel service panel is provided. The oven arrives completely assembled, ETL Listed, ready to install and is made in the USA. Information about custom finishes, tools and accessories can be found online at: woodstone-corp.com.

HEARTH CAPACITY

8" pizzas:	18–22
10" pizzas:	14–16
12" pizzas:	14-16
16" pizzas:	6–8

Assuming 5-minute cook times, the approximate maximum hourly production capacity can be calculated by multiplying the above numbers by 12. Cook times will also vary depending on "style" of pizza.

GUIDE TO MODEL NUMBERS

	Radiant Flame	Underfloor IR Burner	Wood Required	Combination	Natural Gas BTU/hr	Liquid Propane BTU/hr
WS-MS-6-RFG	X				-NG 105,000	-LP 94,000
WS-MS-6-RFG-W	X			X	-NG 105,000	-LP 94,000
WS-MS-6-RFG-IR	X	X			-NG 188,000	-LP 159,000
WS-MS-6-RFG-IR-W	X	X		X	-NG 188,000	-LP 159,000
WS-MS-6-W-IR		X	X		-NG 83,000	-LP 65,000
WS-MS-6-W			X			

FUEL CONFIGURATIONS

GAS-FIRED ONLY: Configured to burn either natural gas (NG) or liquid propane (LP).*

❑ **RADIANT FLAME (RFG):** Heated by an easily adjustable radiant flame (105,000 BTU/hr max. NG) located in the rear of the cooking chamber. User control ensures the ability to balance the oven's radiated top heat with the heat being conducted and radiated from the floor.

❑ **RADIANT FLAME + UNDERFLOOR IR (RFG-IR):** In addition to the radiant flame, an 83,000 BTU/hr (NG) thermostatically controlled infrared burner is mounted under the oven deck to ensure high production capacity with no heat recovery issues.

❑ **WOOD-FIRED (W):** Wood-fired only.

❑ **WOOD WITH GAS ASSIST (W-IR):** This wood-fired model is assisted by the additional BTUs of an Underfloor IR burner. **Note:** A wood fire is required with this configuration.

❑ **COMBINATION (-W):** Allows optional wood burning for ovens with gas burner configurations.* **Note:** Adding wood to an oven with an RFG burner will reduce available hearth capacity.

*Gas type must be specified at time of order.

Intertek
ANSI Z83.11:2016 Ed.4
CSA 1.8:2016 Ed.4

Intertek
ANSI/NSF 4:2016

t. 360.650.1111
tf. 800.988.8103
f. 360.650.1166

Wood Stone Corporation
1801 W. Bakerview Rd.
Bellingham, WA 98226 USA
info@woodstone-corp.com
woodstone-corp.com

REVISED: SUMMER 2021

An ongoing program of product improvement may require us to change specifications without notice.

WOOD STONE

WARNING Cancer and Reproductive Harm - www.P65Warnings.ca.gov

MT. BAKER 6'

STONE HEARTH OVEN • WS-MS-6

A	Flue Collar
B	Mantle
C	Flame Height Control Knob
D	Digital Controller
E	Forklift Here
	Electrical Connection
F	Service Panel or Optional Storage Box
G	Gas Connection
	Must Be Left Removable for Service
	AIR INTAKE: Do Not Facade or Cover Over

PLAN VIEW

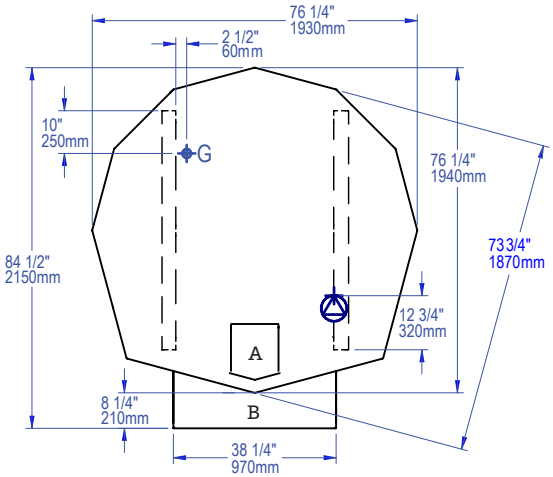

FACADE INFORMATION

- All facades or enclosures are by others.
- All MS ovens require a 1" side clearance and 6" top clearance to combustible construction. Any construction 6" to either side of the oven doorway and above must be non-combustible.
- Any facade or enclosure below the mantle of Gas-Fired or Combination ovens must allow for:
  - Unobstructed access for removal of service/intake panel.
  - Easy access to all controls.
  - Sufficient combustion air for gas burners; see Installation and Operation Manual for details.

FRONT VIEW

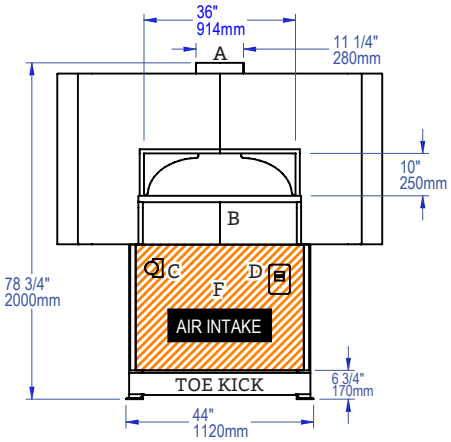

SIDE VIEW

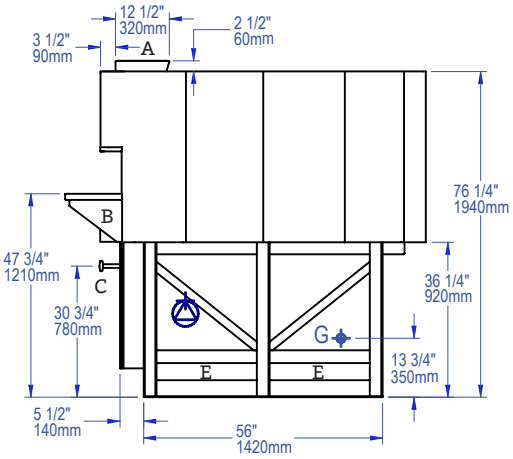

UTILITIES SPECIFICATIONS

GAS

¾ inch gas inlet (FNPT)

BTU/hr Requirements

See table on previous page

ELECTRICAL

Gas-Fired Only & Combination

120 VAC, 1.1 A, 50/60 Hz

Connection made beneath oven as shown.

Wood-Fired Only

120 VAC, 2 A, 50/60 Hz

Connection made to readout box.

VENTING INFORMATION

The Mt. Baker can be direct connected to a power-ventilated, grease-rated chimney or can be vented with a Listed Type 1 exhaust hood, or one constructed in accordance with NFPA 96 and all relevant local and national codes. The oven must be vented in accordance with all relevant local and national codes, and in a manner acceptable to the authority having jurisdiction.

Note: A 10" ID flue adapter is included with ovens ordered without a hood to facilitate connection to a round duct (adds 3" to height).

Ship Weight: 4,600 lbs / 2,087 kg

Intertek
ANSI Z83.11:2016 Ed.4
CSA 1.8:2016 Ed.4

Intertek
ANSI/NSF 4:2016

t. 360.650.1111
tf. 800.988.8103
f. 360.650.1166

Wood Stone Corporation
1801 W. Bakerview Rd.
Bellingham, WA 98226 USA
info@woodstone-corp.com
woodstone-corp.com

REVISED: SUMMER 2021

An ongoing program of product improvement may require us to change specifications without notice.

WOOD STONE

WARNING Cancer and Reproductive Harm - www.P65Warnings.ca.gov

WOOD STONE

MT. RAINIER 7'
STONE HEARTH OVEN

Job Name	
Model	WS-MS-7
Item#	

WS-MS-7 model with optional Stainless Steel Mantle shown.

The Mt. Rainier 7' oven features a door opening 42 inches wide x 12 inches high. The oven floor diameter is 74 inches, resulting in a 31-square-foot cooking surface. A tensioned steel exoskeleton surrounding the hearth and dome perimeter ensures structural integrity and longevity. Wrapped in spun ceramic fiber insulation and requiring only a 1-inch side clearance to combustibles, the monolithic 4-inch thick cast-ceramic hearth and monolithic 4-inch thick dome rest on an open black painted steel stand. The oven body is finished with galvanized steel and a stainless steel service panel is provided. The oven arrives completely assembled, ETL Listed, ready to install and is made in the USA. Information about custom finishes, tools and accessories can be found online at: woodstone-corp.com.

HEARTH CAPACITY

8" pizzas:	36–40
10" pizzas:	22–26
12" pizzas:	16–20
16" pizzas:	8–10

Assuming 5-minute cook times, the approximate maximum hourly production capacity can be calculated by multiplying the above numbers by 12. Cook times will also vary depending on "style" of pizza.

GUIDE TO MODEL NUMBERS

	Radiant Flame	Underfloor IR Burner	Wood Required	Combination	Natural Gas BTU/hr	Liquid Propane BTU/hr
WS-MS-7-RFG	X				-NG 123,000	-LP 142,000
WS-MS-7-RFG-W	X			X	-NG 123,000	-LP 142,000
WS-MS-7-RFG-IR	X	X			-NG 220,000	-LP 227,000
WS-MS-7-RFG-IR-W	X	X		X	-NG 220,000	-LP 227,000
WS-MS-7-W-IR		X	X		-NG 97,000	-LP 85,000
WS-MS-7-W			X			

FUEL CONFIGURATIONS

GAS-FIRED ONLY: Configured to burn either natural gas (NG) or liquid propane (LP).*

❑ **RADIANT FLAME (RFG):** Heated by an easily adjustable radiant flame (123,000 BTU/hr max. NG) located in the rear of the cooking chamber. User control ensures the ability to balance the oven's radiated top heat with the heat being conducted and radiated from the floor.

❑ **RADIANT FLAME + UNDERFLOOR IR (RFG-IR):** In addition to the radiant flame, a 97,000 BTU/hr (NG) thermostatically controlled infrared burner is mounted under the oven deck to ensure high production capacity with no heat recovery issues.

❑ **WOOD-FIRED (W):** Wood-fired only.

❑ **WOOD WITH GAS ASSIST (W-IR):** This wood-fired model is assisted by the additional BTUs of an Underfloor IR burner. **Note:** A wood fire is required with this configuration.

❑ **COMBINATION (-W):** Allows optional wood burning for ovens with gas burner configurations.* **Note:** Adding wood to an oven with an RFG burner will reduce available hearth capacity.

*Gas type must be specified at time of order.

Intertek
ANSI Z83.11:2016 Ed.4
CSA 1.8:2016 Ed.4

Intertek
ANSI/NSF 4:2016

t. 360.650.1111
tf. 800.988.8103
f. 360.650.1166

Wood Stone Corporation
1801 W. Bakerview Rd.
Bellingham, WA 98226 USA
info@woodstone-corp.com
woodstone-corp.com

REVISED: SUMMER 2021

An ongoing program of product improvement may require us to change specifications without notice.

WOOD STONE

WARNING Cancer and Reproductive Harm - www.P65Warnings.ca.gov

MT. RAINIER 7'
STONE HEARTH OVEN • WS-MS-7

A	Flue Collar
B	Mantle
C	Flame Height Control Knob
D	Digital Controller
E	Forklift Here
	Electrical Connection
F	Service Panel or Optional Storage Box
G	Gas Connection
	Must Be Left Removable for Service
	AIR INTAKE: Do Not Facade or Cover Over

PLAN VIEW

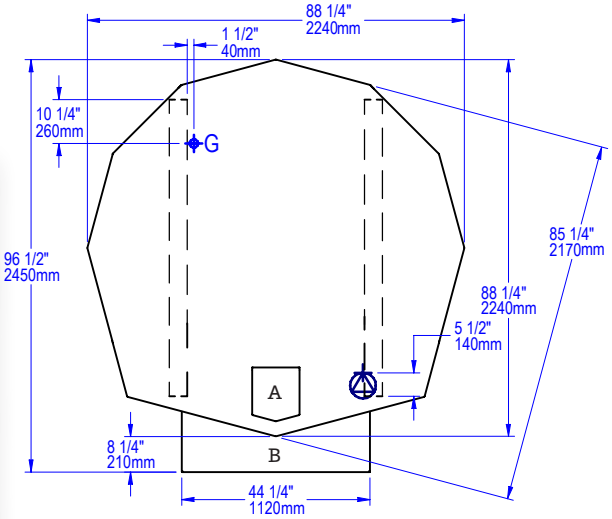

FACADE INFORMATION

- All facades or enclosures are by others.
- All MS ovens require a 1" side clearance and 6" top clearance to combustible construction. Any construction 6" to either side of the oven doorway and above must be non-combustible.
- Any facade or enclosure below the mantle of Gas-Fired or Combination ovens must allow for:
  - Unobstructed access for removal of service/intake panel.
  - Easy access to all controls.
  - Sufficient combustion air for gas burners; see Installation and Operation Manual for details.

FRONT VIEW

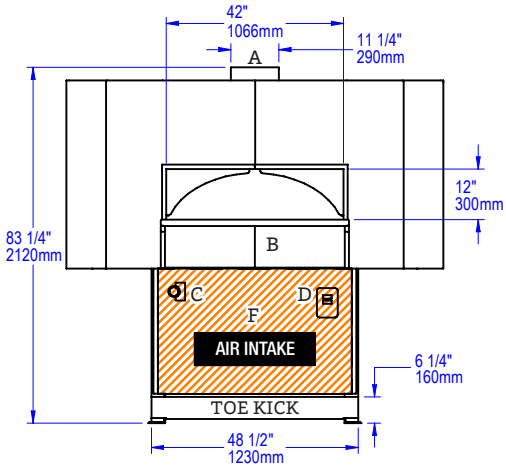

SIDE VIEW

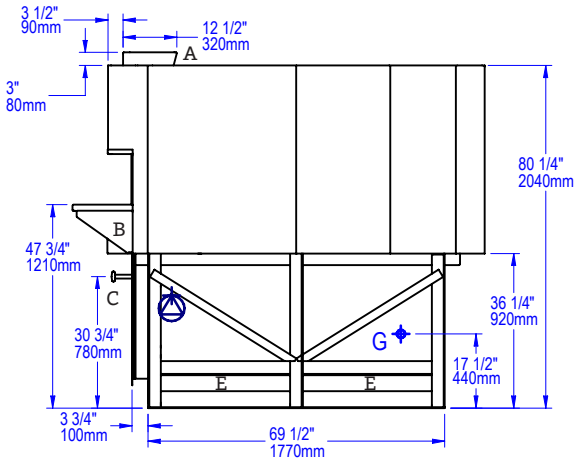

UTILITIES SPECIFICATIONS

GAS
¾ inch gas inlet (FNPT)

BTU/hr Requirements
See table on previous page

ELECTRICAL
Gas-Fired Only & Combination
120 VAC, 1.1 A, 50/60 Hz
Connection made beneath oven as shown.

Wood-Fired Only
120 VAC, 2 A, 50/60 Hz
Connection made to readout box.

VENTING INFORMATION

The Mt. Rainier can be direct connected to a power-ventilated, grease-rated chimney or can be vented with a Listed Type 1 exhaust hood, or one constructed in accordance with NFPA 96 and all relevant local and national codes. The oven must be vented in accordance with all relevant local and national codes, and in a manner acceptable to the authority having jurisdiction.

Note: A 10" ID flue adapter is included with ovens ordered without a hood to facilitate connection to a round duct (adds 3" to height).

Ship Weight: 6,000 lbs / 2,722 kg

Intertek
ANSI Z83.11:2016 Ed.4
CSA 1.8:2016 Ed.4

Intertek
ANSI/NSF 4:2016

t. 360.650.1111
tf. 800.988.8103
f. 360.650.1166

Wood Stone Corporation
1801 W. Bakerview Rd.
Bellingham, WA 98226 USA
info@woodstone-corp.com
woodstone-corp.com

REVISED: SUMMER 2021

An ongoing program of product improvement may require us to change specifications without notice.

WOOD STONE

WARNING Cancer and Reproductive Harm - www.P65Warnings.ca.gov

WOOD STONE

MOUNTAIN SERIES OVEN MANTLES

MOUNTAIN SERIES - OVEN MANTLES

The Oven Mantle extends the working surface at the doorway of the oven, providing a staging area for dishes going into the oven or a holding area for cooked items awaiting service.

Two mantle types are available through Wood Stone: stainless steel (S/S) or black granite.

Mantle brackets are available with a stainless steel (S/S) or powder coat finish. Both types come complete with all the necessary hardware for mounting.

Another alternative is to supply your own appropriate mantle stone, utilizing either the stainless steel or powder coat mantle bracket.

If you are planning to build your oven into a facade wall, please visit the Facade Tutorials section on the Wood Stone website.

WS-MS-5-RFG-IR model with stainless steel Mantle and stainless steel Mantle Bracket shown.

Mantle

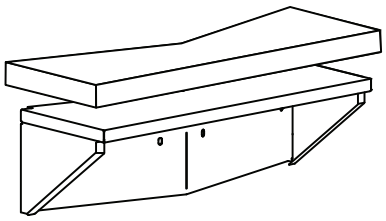

Mantle Bracket

Mantle: S/S Finish

Mantle Bracket: S/S Finish

Mantle: Black Granite

Mantle Bracket: Black Powder Coat Finish

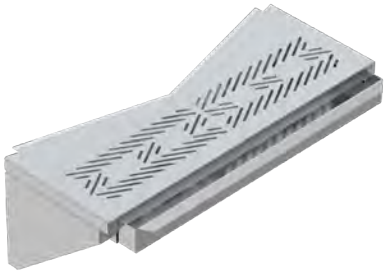

DEBRIS MANTLE

Wood Stone's Debris Mantle helps you maintain a clean cooking surface by offering a convenient receptacle to collect excess buildup on the floor. With a quick sweep using your Wood Stone brush, you can now keep the debris to a minimum and your radiant burners clear. Slide the trays out for easy emptying and wash them in any standard

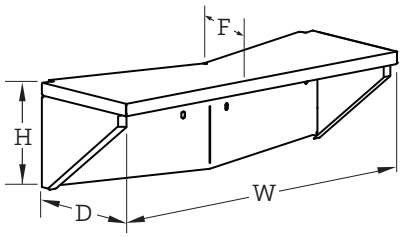

	Stainless Steel (S/S) Mantle				Black Granite Mantle			
Mountain Series	H	W	F	D	H	W	F	D
Mt. Chuckanut 4'	11"	28"	9"	9"	11"	28.75"	10.25"	10.25"
Mt. Adams 5'	11"	32"	8"	12.5"	11"	34.5"	9.25"	13.75"
Mt. Baker 6'	11"	38"	8"	13"	11"	40"	9.25"	14.25"
Mt. Rainier 7'	11"	44"	8"	14"	11"	46.25"	9.25"	15.25"

REVISED: SUMMER 2021

An ongoing program of product improvement may require us to change specifications without notice.

t. 360.650.1111
tf. 800.988.8103
f. 360.650.1166

Wood Stone Corporation
1801 W. Bakerview Rd.
Bellingham, WA 98226 USA
info@woodstone-corp.com
woodstone-corp.com

WOOD STONE

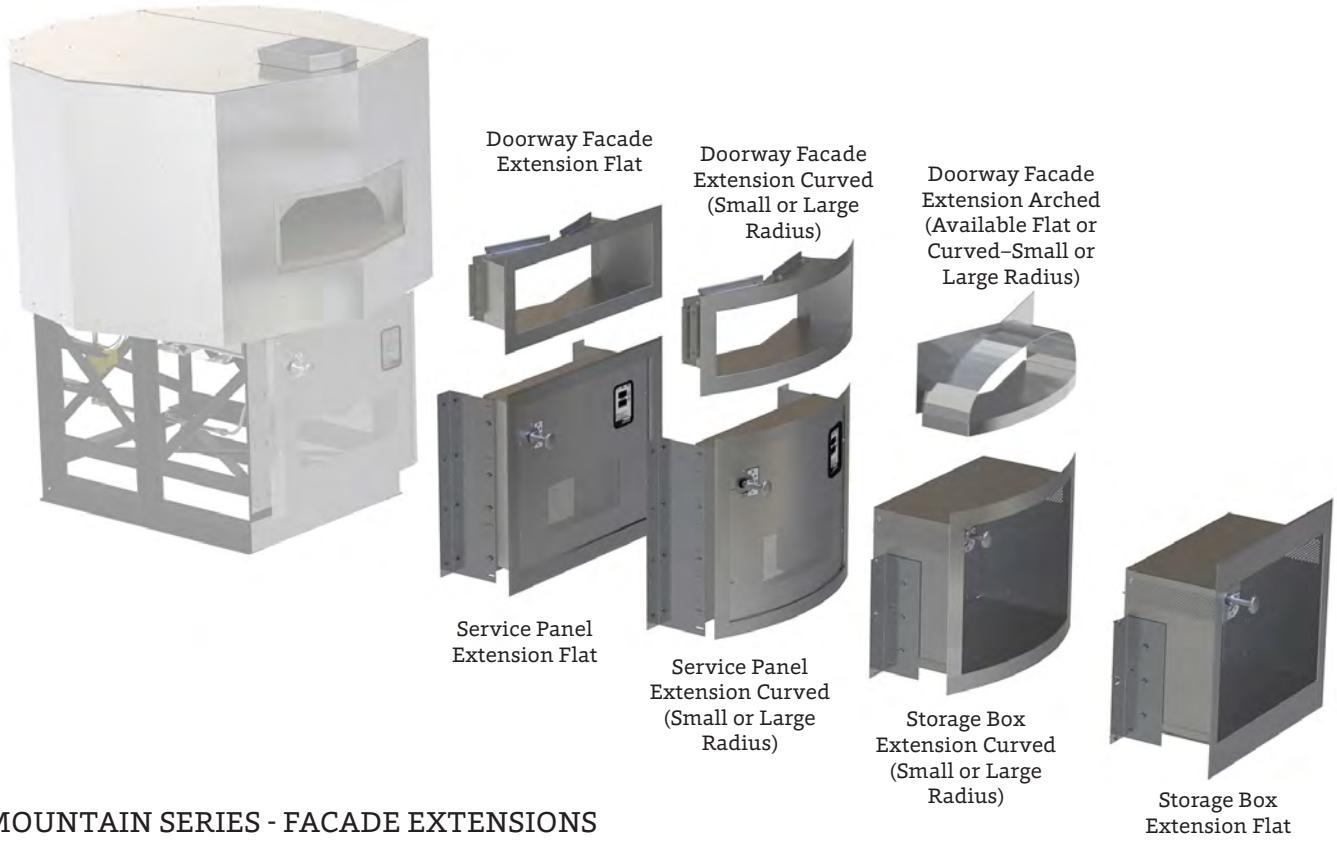

MOUNTAIN SERIES - FACADE EXTENSIONS

Wood Stone offers a number of doorway, service panel and storage box options to help make oven installation into a facade wall seamless and attractive. Coordinated extensions bring the doorway of the oven into alignment with a panel or storage box below the oven. Both must be ordered at the same time to ensure proper alignment.

The face of an extension can be flat or curved. Curved extensions are available in either small or large radius dimensions (see exceptions on next page). Whatever your facade design, there's an option that's right for you.

Additionally, there's an arched doorway extension which mirrors the traditional stone hearth oven design.

The side walls of all rectangular doorway extensions flare out slightly to enhance accessibility into the oven, and create a distinctive and attractive look.

Lower extension options include the Service Panel Extension and the 15" deep Storage Box Extension, which offers additional storage for ovens with an Underfloor IR burner.

For ovens without an IR burner, Stand-Mounted Storage Boxes are an option. See Mountain Series Stand-Mounted Storage Boxes on page 36.

For additional details on incorporating your oven into a facade, see the Facade Tutorials section of the Wood Stone website.

Doorway Facade and Storage Box Large Radius Curved Extensions and Curved Face Hood shown.

t. 360.650.1111
tf. 800.988.8103
f. 360.650.1166

Wood Stone Corporation
1801 W. Bakerview Rd.
Bellingham, WA 98226 USA
info@woodstone-corp.com
woodstone-corp.com

REVISED: SUMMER 2021

An ongoing program of product improvement may require us to change specifications without notice.

WOOD STONE

MOUNTAIN SERIES FACADE EXTENSIONS

PLAN VIEW

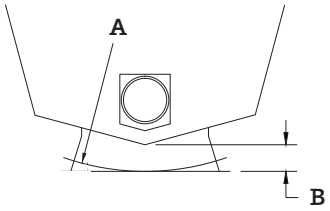

- The addition of granite on the mantle increases dimension (F) by .75" below the doorway.
- Curved Face Extensions are available in large or small radius styles, except for the WS-MS-4, which only has a small radius option.
- The WS-MS-4 Storage Box Extension option **is only available on the** wood-only model.
- Double Door and Viewing Window options affect some dimensions. Call for details.

FRONT VIEW

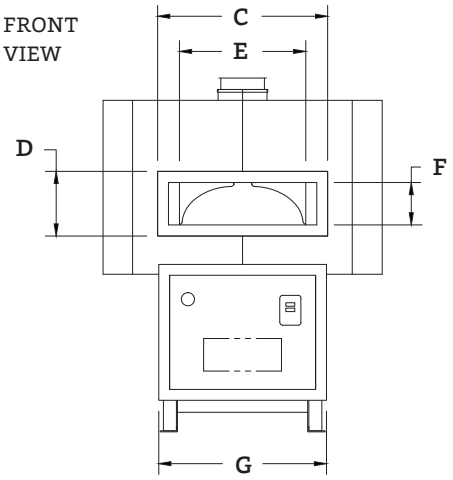

SIDE VIEW

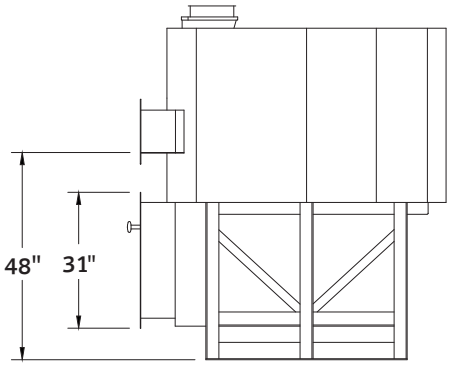

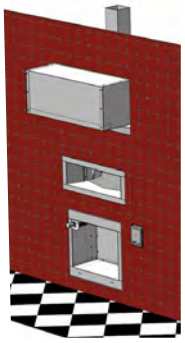

Doorway Facade and Storage Box Flat Extensions and Flat Face Hood shown.

	Extensions		Radius of Curved Extension	Oven Face to Extension Face	Upper Extension: Doorway Frame[1] Width (C) x Height (D)		Upper Extension: Doorway Opening Width (E) x Height (F)		Lower Extension: Width of Service Panel or Box Frame
			A	B	C	D	E	F	G
WS-MS-4	Flat	Doorway / Service Panel / Box[2]	-	6.5"	28"	15"	19.5"	10"	33.5"
		Doorway Arched		6"	-	-		9.5"	
	Small Radius	Doorway / Service Panel / Box[2]	34.5"	10"	28.5"	15"		10"	
WS-MS-5	Flat	Doorway / Service Panel or Box	-	6"	39"	15"	29"	10"	38.5"
		Doorway Arched		5.5"	-	-			
	Small Radius	Doorway / Service Panel or Box	39"	7.5"	39"	15"			35"
		Doorway Arched		7"	-	-			
	Large Radius	Doorway / Service Panel or Box	57"	6"	37.5"	15"			35.5"
		Doorway Arched		5.5"	-	-			
WS-MS-6	Flat	Doorway / Service Panel or Box	-	6"	45.5"	15"	35"	9-1/2"	45"
		Doorway Arched		5.5"	-	-			
	Small Radius	Doorway / Service Panel or Box	44.5"	7.5"	45"	15"			41.5"
		Doorway Arched		7"	-	-			
	Large Radius	Doorway / Service Panel or Box	65.5"	6"	43.5"	15"			
		Doorway Arched		5.5"	-	-			
WS-MS-7	Flat	Doorway / Service Panel or Box	-	6"	52"	17"	41"	11.5"	47.5"
		Doorway Arched		5.5"	-	-		12"	
	Small Radius	Doorway / Service Panel / Box	52"	8.5"	52"	17"		11.5"	47"
		Doorway Arched		8"	-	-			
	Large Radius	Doorway / Service Panel or Box	75.5"	6"	50"	17"			47.5"
		Doorway Arched		5.5"	-	-			

Dimension tolerance ± 1/2"

[1] Doorway Facade Extension Arched does not have a frame.

[2] The WS-MS-4 Storage Box Extension option **is only available on the** wood-only model.

WOOD STONE

MOUNTAIN SERIES - STAND-MOUNTED STORAGE BOXES

Wood Stone's Mountain Series Stand-Mounted Storage Box is constructed of stainless steel. When installed, it rests on the oven stand. The box must remain removable for service access.

Mountain Series Stand-Mounted Storage Boxes are intended for use only with -W, -RFG and RFG-W models. For the WS-MS-4, a Stand-Mounted Storage Box is only an option with the wood-only model. They cannot be used with IR-equipped models. Storage Boxes for IR-equipped models are called Storage Box Facade Extensions, and can be found in the Facade Extensions section on pages 34–35 of this catalog.

WS-MS-5-RFG model shown.

WS-MS-4 Stand-Mounted Storage Box

WS-MS-5 Stand-Mounted Storage Box

Model	Item #	Height	Width	Depth
WS-MS-4	0-4-BOX-W-SS	21.875" 556mm	27.5" 699mm	28" 711mm
WS-MS-5	0-5-BOX-W-SS		29" 737mm	
WS-MS-6	0-6-BOX-W-SS		35" 889mm	
WS-MS-7	0-7-BOX-W-SS		41" 1041mm	

WS-MS-6 Stand-Mounted Storage Box

WS-MS-7 Stand-Mounted Storage Box

t. 360.650.1111
tf. 800.988.8103
f. 360.650.1166

Wood Stone Corporation
1801 W. Bakerview Rd.
Bellingham, WA 98226 USA
info@woodstone-corp.com
woodstone-corp.com

REVISED: SUMMER 2021

An ongoing program of product improvement may require us to change specifications without notice.

WOOD STONE

 WARNING Cancer and Reproductive Harm - www.P65Warnings.ca.gov

WOOD STONE

MOUNTAIN SERIES CERAMIC LOGSET

WS-MS-5 model with Ceramic Logset shown.

CERAMIC LOGSET

This realistic looking Ceramic Logset is designed for Mountain Series stone hearth ovens, providing the look of a wood-fired oven.

It comes with a protective stainless steel grate and fits neatly over the radiant burner. The lip of the grate also helps keep debris out of the burner.

For Mountain Series ovens, logsets are available for rear flame location only.

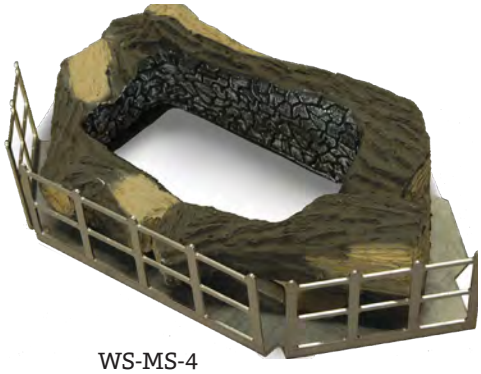

WS-MS-4

WS-MS-5, WS-MS-6

WS-MS-7

Model	Item #
WS-MS-4	000-004-LOG
WS-MS-5,6	000-056-LOG
WS-MS-7	000-007-LOG

t. 360.650.1111
tf. 800.988.8103
f. 360.650.1166

Wood Stone Corporation
1801 W. Bakerview Rd.
Bellingham, WA 98226 USA
info@woodstone-corp.com
woodstone-corp.com

REVISED: SUMMER 2021

An ongoing program of product improvement may require us to change specifications without notice.

WOOD STONE

MOUNTAIN SERIES DOUBLE DOORS

WOOD STONE

DOUBLE DOOR OPTION

Wood Stone offers Double Door options for Mountain Series and Fire Deck Series ovens.

With the Double Door option, access is available from a second doorway in select positions. Adding a second doorway can change the efficiency and production capacity of your oven. For more information, contact the Wood Stone Culinary Team.

We recommend including an optional Underfloor Infrared (IR) burner (RFG-IR models) for multiple opening ovens as an assist to maintain high-production capabilities.

In Double Door configurations both the Control Door, the side where the oven controls are located, and the second door are approximately 30". This represents a reduction in Control Door size on the WS-MS-6 and WS-MS-7 oven.

Illustrated below are multiple doorway configurations for WS-MS-5, WS-MS-6 and WS-MS-7 Mountain Series ovens. All oven models can accommodate a second door in the 90°, 120°, 180°, 240° and 270° position. The gray mantle represents the Control Door side. The green mantle represents the second vented, functioning doorway with mantle. The orange bars represent potential radiant burner positions for gas-fired configurations.

With multiple doorways, each must be vented in accordance with all relevant local and national codes, and in a manner acceptable to the authority having jurisdiction.

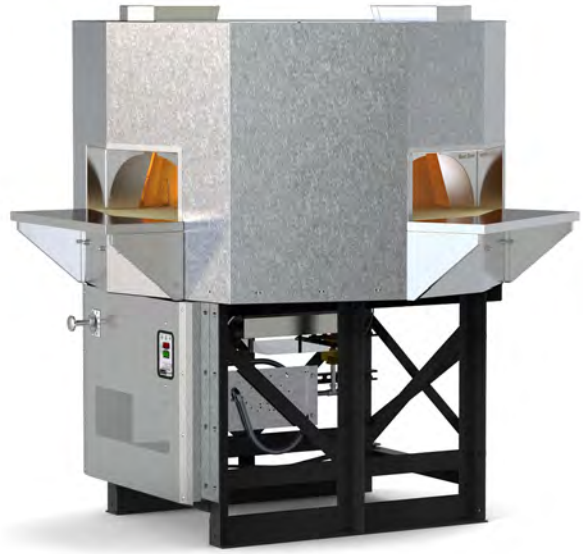

WS-MS-5-RFG-IR with 240° Double Door shown.

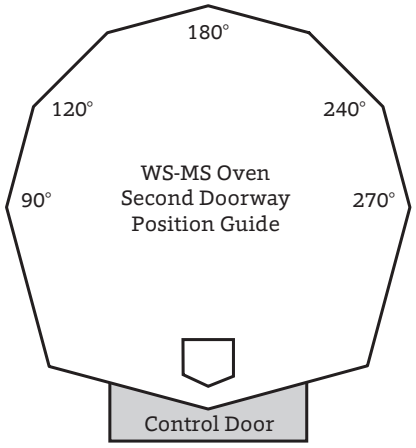

Double Doorway / Burner Positions

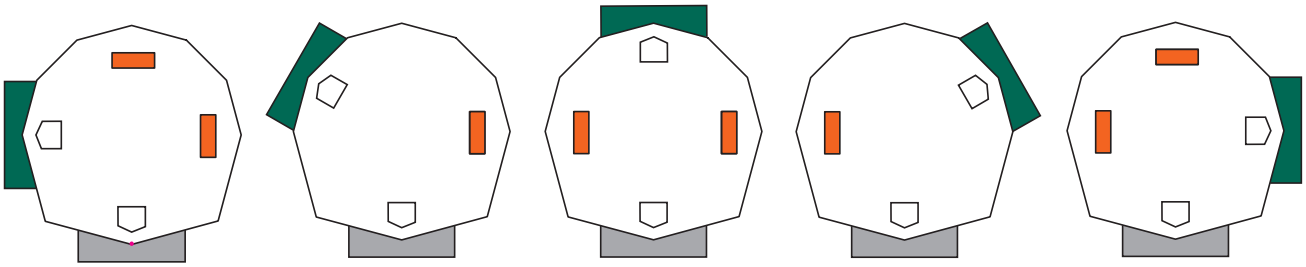

90° Door with Burners shown in Back or Right-Side positions

120° Door with Right-Side Burner

180° Door with Burners shown in Right- or Left-Side positions

240° Door with Left-Side Burner

270° Door with Burners shown in Back or Left-Side positions

t. 360.650.1111
tf. 800.988.8103
f. 360.650.1166

Wood Stone Corporation
1801 W. Bakerview Rd.
Bellingham, WA 98226 USA
info@woodstone-corp.com
woodstone-corp.com

REVISED: SUMMER 2021

An ongoing program of product improvement may require us to change specifications without notice.

WOOD STONE

 WARNING Cancer and Reproductive Harm - www.P65Warnings.ca.gov

WOOD STONE

BISTRO 3030
STONE HEARTH OVEN

Job Name	
Model	WS-BL-3030
Item#	

The Bistro 3030 oven features a door opening 18.5 inches wide x 7.5 inches high. The cooking area is 22 inches wide x 19 inches deep, resulting in a 3-square-foot cooking surface. A tensioned steel exoskeleton surrounding the hearth and dome perimeter ensures structural integrity and longevity. Wrapped in spun ceramic fiber insulation and requiring only a 1-inch side clearance to combustibles, the monolithic cast-ceramic hearth and monolithic dome rest on a black powder coat steel stand while the oven body is enclosed with stainless steel.

The oven arrives completely assembled. However, for ease of installation, the oven can be partially disassembled to fit through a 32-inch doorway. It is ETL Listed, ready to install and is made in the USA.

Information about custom finishes, tools and accessories can be found online at: woodstone-corp.com.

HEARTH CAPACITY

8" pizzas:	4
10" pizzas:	2–3
12" pizzas:	1

Assuming 5-minute cook times, the approximate maximum hourly production capacity can be calculated by multiplying the above numbers by 12. Cook times will also vary depending on "style" of pizza.

FEATURES

- Compact Footprint
- Visible Flame
- Lower Production
- High-Temp Cooking
- 3–5 Minute Pizzas

GUIDE TO MODEL NUMBERS

	Radiant Flame	Natural Gas	Liquid Propane
WS-BL-3030-RFG	X	-NG	-LP

FUEL CONFIGURATIONS

GAS-FIRED ONLY: Configured to burn either natural gas (NG) or liquid propane (LP).*

Note: Wood burning is not an option with this model.

❑ **RADIANT FLAME (RFG):** Heated by an easily adjustable radiant flame (55,000 BTU/hr max. NG) located in the rear of the cooking chamber. User control ensures the ability to balance the oven's radiated top heat with the heat being conducted and radiated from the floor.

*Gas type must be specified at time of order.

Intertek
ANSI Z83.11:2016 Ed.4
CSA 1.8:2016 Ed.4

Intertek
ANSI/NSF 4:2016

t. 360.650.1111
tf. 800.988.8103
f. 360.650.1166

Wood Stone Corporation
1801 W. Bakerview Rd.
Bellingham, WA 98226 USA
info@woodstone-corp.com
woodstone-corp.com

REVISED: SUMMER 2021

An ongoing program of product improvement may require us to change specifications without notice.

WOOD STONE

WARNING Cancer and Reproductive Harm - www.P65Warnings.ca.gov

BISTRO 3030

STONE HEARTH OVEN • WS-BL-3030

A	Flue Collar
B	Mantle
C	Flame Height Control Knob
D	Digital Controller
E	Forklift Here
	Electrical Connection
F	Service Panel or Optional Storage Box
G	Gas Connection
	Must Be Left Removable for Service
	AIR INTAKE: Do Not Facade or Cover Over

PLAN VIEW

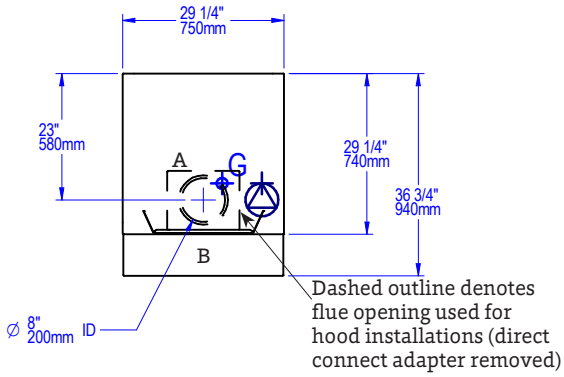

REAR VIEW

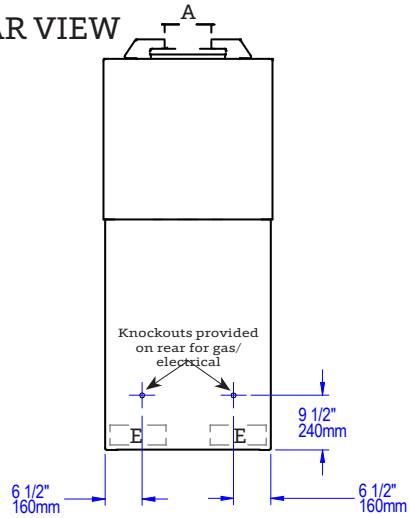

FRONT VIEW

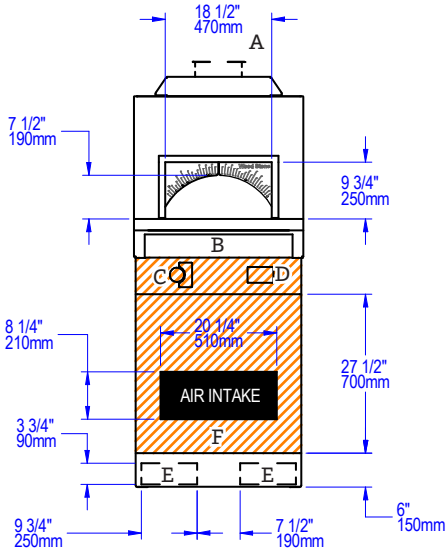

SIDE VIEW

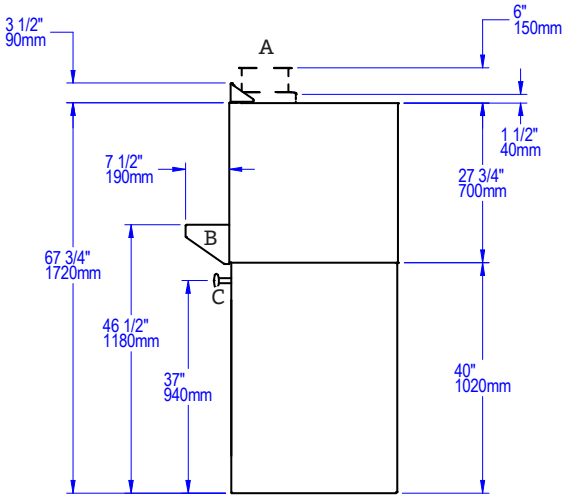

UTILITIES SPECIFICATIONS

GAS

Gas-Fired

¾ inch gas inlet (FNPT)

55,000 BTU/hr - Natural Gas (NG)

OR

42,000 BTU/hr - Propane (LP)

ELECTRICAL

Gas-Fired

120 VAC, 2 A, 60 Hz

Connection made on the back of the oven control box. Remove front panel for access; use utility knockouts (provided) to route gas and electrical supplies.

VENTING INFORMATION

The Bistro 3030 has an 8-inch O.D. flue collar and can be direct connected to a power-ventilated, grease-rated chimney or can be vented with a Listed Type 1 exhaust hood, or one constructed in accordance with NFPA 96 and all relevant local and national codes. The oven must be vented in accordance with all relevant local and national codes, and in a manner acceptable to the authority having jurisdiction.

Ship Weight: 1,100 lbs / 500 kg

Intertek
ANSI Z83.11:2016 Ed.4
CSA 1.8:2016 Ed.4

Intertek
ANSI/NSF 4:2016

t. 360.650.1111
tf. 800.988.8103
f. 360.650.1166

Wood Stone Corporation
1801 W. Bakerview Rd.
Bellingham, WA 98226 USA
info@woodstone-corp.com
woodstone-corp.com

REVISED: SUMMER 2021

An ongoing program of product improvement may require us to change specifications without notice.

WOOD STONE

WARNING Cancer and Reproductive Harm - www.P65Warnings.ca.gov

WOOD STONE

BISTRO 4343
STONE HEARTH OVEN

Job Name	
Model	WS-BL-4343
Item#	

The Bistro 4343 oven features a door opening 24.5 inches wide x 7.5 inches high. The cooking area is 34 inches wide x 27 inches deep, resulting in a 6.4-square-foot cooking surface. A tensioned steel exoskeleton surrounding the hearth and dome perimeter ensures structural integrity and longevity. Wrapped in spun ceramic fiber insulation and requiring only a 1-inch side clearance to combustibles, the monolithic cast-ceramic hearth and monolithic dome rest on a black powder coat steel stand while the oven body is enclosed with stainless steel.

The oven arrives completely assembled. However, using the optional Lifting System, the oven can be partially disassembled to fit through a 32-inch doorway—see the Installation and Operation Manual for details. It is ETL Listed, ready to install and is made in the USA.

Information about custom finishes, tools and accessories can be found online at: woodstone-corp.com.

HEARTH CAPACITY

8" pizzas:	8
10" pizzas:	6
12" pizzas:	4
16" pizzas:	2

Assuming 5-minute cook times, the approximate maximum hourly production capacity can be calculated by multiplying the above numbers by 12. Cook times will also vary depending on "style" of pizza.

FEATURES

- Compact Footprint
- Visible Flame
- Low to Medium Production
- High-Temp Cooking
- 3–5 Minute Pizzas

GUIDE TO MODEL NUMBERS

	Radiant Flame	Wood-Fired Only	Combination	Natural Gas	Liquid Propane
WS-BL-4343-RFG	X			-NG	-LP
WS-BL-4343-RFG-W	X		X	-NG	-LP
WS-BL-4343-W		X			

FUEL CONFIGURATIONS

GAS-FIRED ONLY: Configured to burn either natural gas (NG) or liquid propane (LP).*

❑ **RADIANT FLAME (RFG):** Heated by an easily adjustable radiant flame (80,500 BTU/hr max. NG) located in the rear of the cooking chamber. User control ensures the ability to balance the oven's radiated top heat with the heat being conducted and radiated from the floor.

❑ **WOOD-FIRED (W):** Wood-fired only.

❑ **COMBINATION (-W):** Allows optional wood burning for ovens with gas burner configurations.* **Note:** Adding wood to an oven with an RFG burner will reduce available hearth capacity.

*Gas type must be specified at time of order.

Intertek
ANSI Z83.11:2016 Ed.4
CSA 1.8:2016 Ed.4

Intertek
ANSI/NSF 4:2016

t. 360.650.1111
tf. 800.988.8103
f. 360.650.1166

Wood Stone Corporation
1801 W. Bakerview Rd.
Bellingham, WA 98226 USA
info@woodstone-corp.com
woodstone-corp.com

REVISED: SUMMER 2021

An ongoing program of product improvement may require us to change specifications without notice.

WOOD STONE

WARNING Cancer and Reproductive Harm - www.P65Warnings.ca.gov

BISTRO 4343

STONE HEARTH OVEN • WS-BL-4343

A	Flue Collar
B	Mantle
C	Flame Height Control Knob
D	Digital Controller
E	Forklift Here
	Electrical Connection
F	Service Panel or Optional Storage Box
G	Gas Connection
	Must Be Left Removable for Service
	AIR INTAKE: Do Not Facade or Cover Over

PLAN VIEW

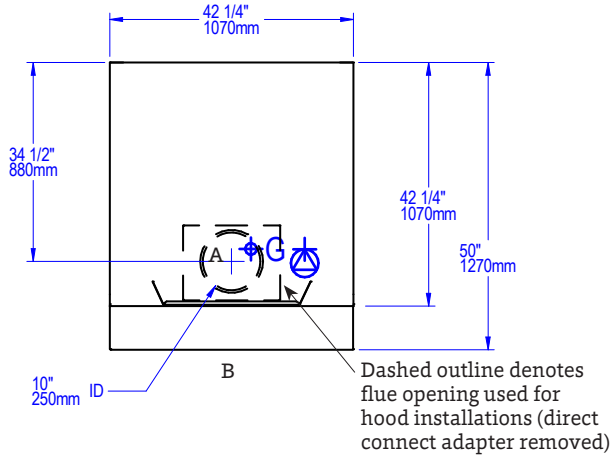

REAR VIEW

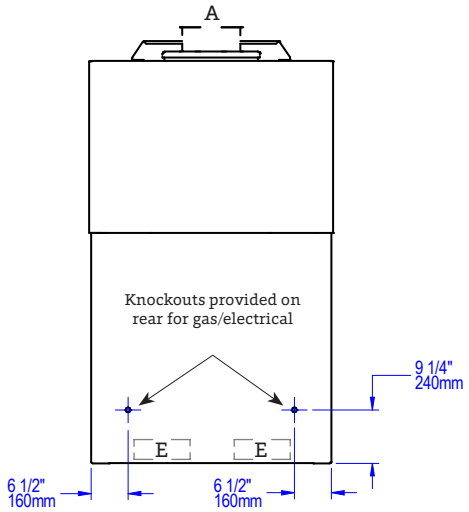

FRONT VIEW

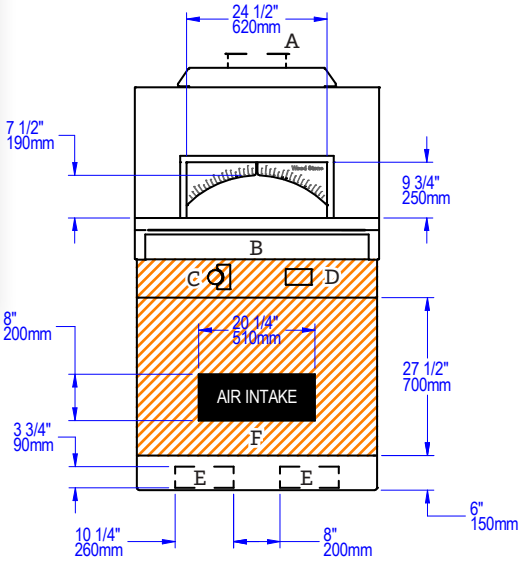

SIDE VIEW

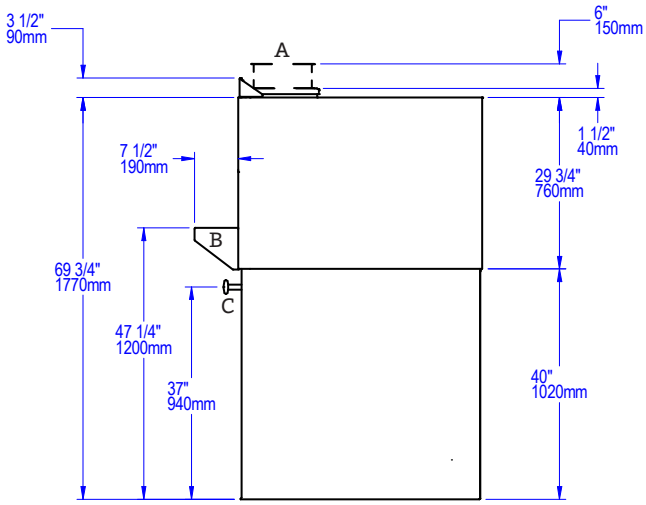

UTILITIES SPECIFICATIONS

GAS

Gas-Fired Only and Combination

¾ inch gas inlet (FNPT)

80,500 BTU/hr - Natural Gas (NG)

OR

68,000 BTU/hr - Propane (LP)

ELECTRICAL

All Models

120 VAC, 2 A, 60 Hz

Connection made on the back of the oven control box. Remove front panel for access; use utility knockouts (provided) to route gas and electrical supplies.

VENTING INFORMATION

The Bistro 4343 has a 10-inch O.D. flue collar and can be direct connected to a power-ventilated, grease-rated chimney or can be vented with a Listed Type 1 exhaust hood, or one constructed in accordance with NFPA 96 and all relevant local and national codes. The oven must be vented in accordance with all relevant local and national codes, and in a manner acceptable to the authority having jurisdiction.

Ship Weight: 2,100 lbs / 953 kg

Intertek
ANSI Z83.11:2016 Ed.4
CSA 1.8:2016 Ed.4

Intertek
ANSI/NSF 4:2016

t. 360.650.1111
tf. 800.988.8103
f. 360.650.1166

Wood Stone Corporation
1801 W. Bakerview Rd.
Bellingham, WA 98226 USA
info@woodstone-corp.com
woodstone-corp.com

REVISED: SUMMER 2021

An ongoing program of product improvement may require us to change specifications without notice.

WOOD STONE

WARNING Cancer and Reproductive Harm - www.P65Warnings.ca.gov

WOOD STONE

BISTRO 4355
STONE HEARTH OVEN

Job Name	
Model	WS-BL-4355
Item#	

The Bistro 4355 oven features a door opening 24.5 inches wide x 7.5 inches high. The cooking area is 34 inches wide x 39 inches deep, resulting in a 9.2-square-foot cooking surface. A tensioned steel exoskeleton surrounding the hearth and dome perimeter ensures structural integrity and longevity. Wrapped in spun ceramic fiber insulation and requiring only a 1-inch side clearance to combustibles, the monolithic cast-ceramic hearth and monolithic dome rest on a black powder coat steel stand while the oven body is enclosed with stainless steel.

The oven arrives completely assembled. However, using the optional Lifting System, the oven can be partially disassembled to fit through a 32-inch doorway—see the Installation and Operation Manual for details. It is ETL Listed, ready to install and is made in the USA.

Information about custom finishes, tools and accessories can be found online at: woodstone-corp.com.

HEARTH CAPACITY

8" pizzas:	9–12
10" pizzas:	9
12" pizzas:	6
16" pizzas:	4

Assuming 5-minute cook times, the approximate maximum hourly production capacity can be calculated by multiplying the above numbers by 12. Cook times will also vary depending on "style" of pizza.

FEATURES

- Compact Footprint
- Visible Flame
- Medium Production
- High-Temp Cooking
- 3–5 Minute Pizzas

GUIDE TO MODEL NUMBERS

	Radiant Flame	Wood-Fired Only	Combination	Natural Gas	Liquid Propane
WS-BL-4355-RFG	X			-NG	-LP
WS-BL-4355-RFG-W	X		X	-NG	-LP
WS-BL-4355-W		X			

FUEL CONFIGURATIONS

GAS-FIRED ONLY: Configured to burn either natural gas (NG) or liquid propane (LP).*

❑ **RADIANT FLAME (RFG):** Heated by an easily adjustable radiant flame (80,500 BTU/hr max. NG) located in the rear of the cooking chamber. User control ensures the ability to balance the oven's radiated top heat with the heat being conducted and radiated from the floor.

❑ **WOOD-FIRED (W):** Wood-fired only.

❑ **COMBINATION (-W):** Allows optional wood burning for ovens with gas burner configurations.* **Note:** Adding wood to an oven with an RFG burner will reduce available hearth capacity.

*Gas type must be specified at time of order.

Intertek
ANSI Z83.11:2016 Ed.4
CSA 1.8:2016 Ed.4

Intertek
ANSI/NSF 4:2016

t. 360.650.1111
tf. 800.988.8103
f. 360.650.1166

Wood Stone Corporation
1801 W. Bakerview Rd.
Bellingham, WA 98226 USA
info@woodstone-corp.com
woodstone-corp.com

REVISED: SUMMER 2021

An ongoing program of product improvement may require us to change specifications without notice.

WOOD STONE

WARNING Cancer and Reproductive Harm - www.P65Warnings.ca.gov

BISTRO 4355

STONE HEARTH OVEN • WS-BL-4355

A	Flue Collar
B	Mantle
C	Flame Height Control Knob
D	Digital Controller
E	Forklift Here
	Electrical Connection
F	Service Panel or Optional Storage Box
G	Gas Connection
	Must Be Left Removable for Service
	AIR INTAKE: Do Not Facade or Cover Over

PLAN VIEW

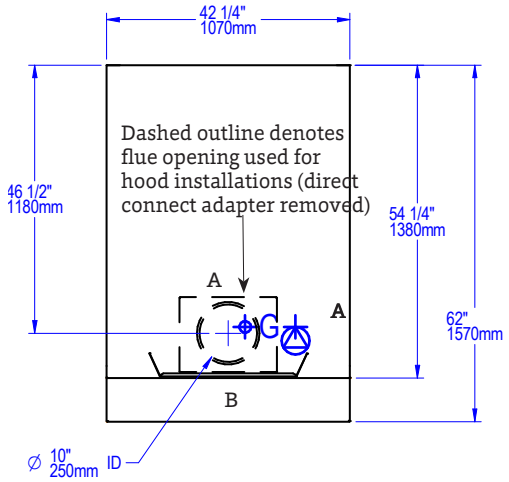

REAR VIEW

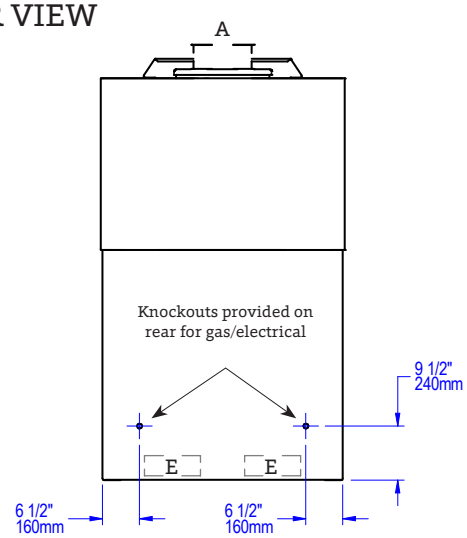

FRONT VIEW

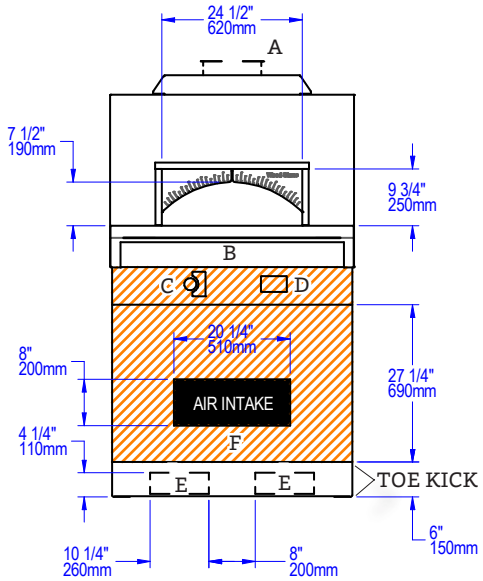

SIDE VIEW

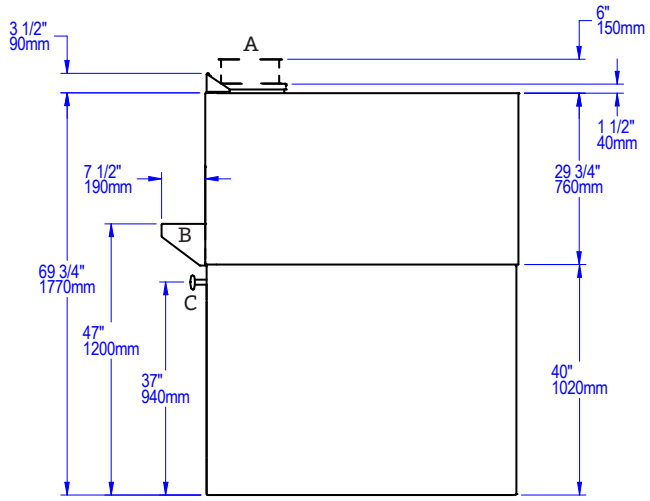

UTILITIES SPECIFICATIONS

GAS

Gas-Fired Only and Combination

¾ inch gas inlet (FNPT)

80,500 BTU/hr - Natural Gas (NG)

OR

68,000 BTU/hr - Propane (LP)

ELECTRICAL

All Models

120 VAC, 2 A, 60 Hz

Connection made on the back of the oven control box. Remove front panel for access; use utility knockouts (provided) to route gas and electrical supplies.

VENTING INFORMATION

The Bistro 4355 has a 10-inch O.D. flue collar and can be direct connected to a power-ventilated, grease-rated chimney or can be vented with a Listed Type 1 exhaust hood, or one constructed in accordance with NFPA 96 and all relevant local and national codes. The oven must be vented in accordance with all relevant local and national codes, and in a manner acceptable to the authority having jurisdiction.

Ship Weight: 2,500 lbs / 1,134 kg

Intertek
ANSI Z83.11:2016 Ed.4
CSA 1.8:2016 Ed.4

Intertek
ANSI/NSF 4:2016

t. 360.650.1111
tf. 800.988.8103
f. 360.650.1166

Wood Stone Corporation
1801 W. Bakerview Rd.
Bellingham, WA 98226 USA
info@woodstone-corp.com
woodstone-corp.com

REVISED: SUMMER 2021

An ongoing program of product improvement may require us to change specifications without notice.

WOOD STONE

WARNING Cancer and Reproductive Harm - www.P65Warnings.ca.gov

WOOD STONE

BISTRO 4836
STONE HEARTH OVEN

Job Name	
Model	WS-BL-4836
Item#	

WS-BL-4836-RFG-R model shown.

The Bistro 4836 oven features a door opening 24.5 inches wide x 7.5 inches high. The cooking area is 32 inches wide x 26 inches deep, resulting in a 5.8-square-foot cooking surface. A tensioned steel exoskeleton surrounding the hearth and dome perimeter ensures structural integrity and longevity. Wrapped in spun ceramic fiber insulation and requiring only a 1-inch side clearance to combustibles, the monolithic cast-ceramic hearth and monolithic dome rest on a black powder coat steel stand while the oven body is enclosed with stainless steel.

For maximum pizza production in this footprint, a left or right side flame is optimal.

The oven arrives completely assembled. However, using the optional Lifting System, the oven can be partially disassembled to fit through a 32-inch doorway—see the Installation and Operation Manual for details. It is ETL Listed, ready to install and is made in the USA.

Information about custom finishes, tools and accessories can be found online at: woodstone-corp.com.

HEARTH CAPACITY

8" pizzas:	8
10" pizzas:	6
12" pizzas:	4
16" pizzas:	1–2

Assuming 5-minute cook times, the approximate maximum hourly production capacity can be calculated by multiplying the above numbers by 12. Cook times will also vary depending on "style" of pizza.

FEATURES

- Compact Footprint
- Visible Flame
- Low to Medium Production
- High-Temp Cooking
- 3–5 Minute Pizzas
- Left or Right Flame Standard

GUIDE TO MODEL NUMBERS

	Radiant Flame	Natural Gas	Liquid Propane
WS-BL-4836-RFG	X	-NG	-LP

FUEL CONFIGURATIONS

GAS-FIRED ONLY: Configured to burn either natural gas (NG) or liquid propane (LP).*

Note: Wood burning is not an option with this model.

❑ **RADIANT FLAME (RFG):** Heated by an easily adjustable radiant flame (80,500 BTU/hr max. NG) located on the left or right side of the cooking chamber. User control ensures the ability to balance the oven's radiated top heat with the heat being conducted and radiated from the floor.

*Gas type must be specified at time of order.

Intertek
ANSI Z83.11:2016 Ed.4
CSA 1.8:2016 Ed.4

Intertek
ANSI/NSF 4:2016

t. 360.650.1111
tf. 800.988.8103
f. 360.650.1166

Wood Stone Corporation
1801 W. Bakerview Rd.
Bellingham, WA 98226 USA
info@woodstone-corp.com
woodstone-corp.com

REVISED: SUMMER 2021

An ongoing program of product improvement may require us to change specifications without notice.

WOOD STONE

WARNING Cancer and Reproductive Harm - www.P65Warnings.ca.gov

BISTRO 4836

STONE HEARTH OVEN • WS-BL-4836

A	Flue Collar
B	Mantle
C	Flame Height Control Knob
D	Digital Controller
E	Forklift Here
	Electrical Connection
F	Service Panel or Optional Storage Box
G	Gas Connection
	Must Be Left Removable for Service
	AIR INTAKE: Do Not Facade or Cover Over

PLAN VIEW

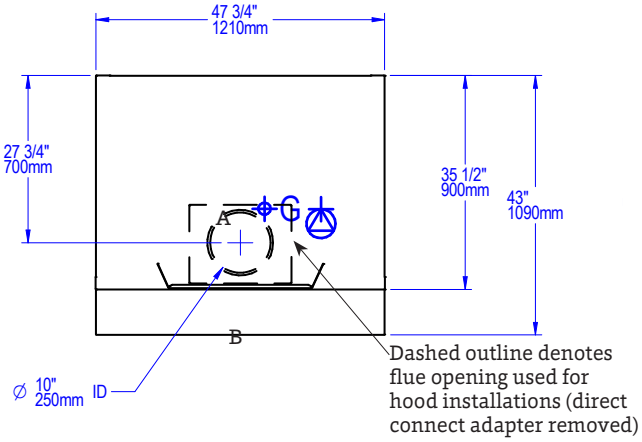

REAR VIEW

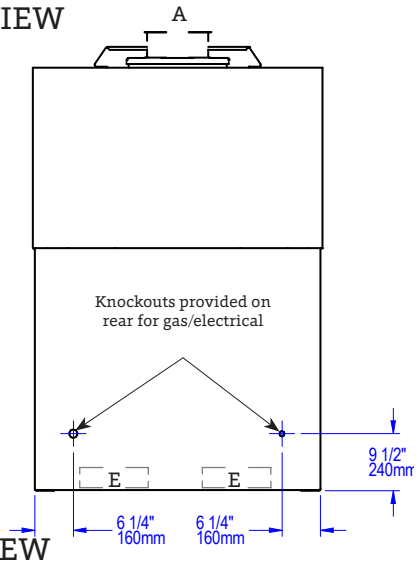

FRONT VIEW

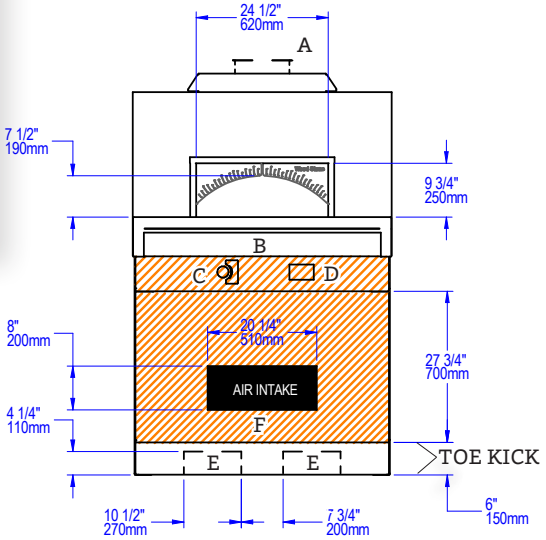

SIDE VIEW

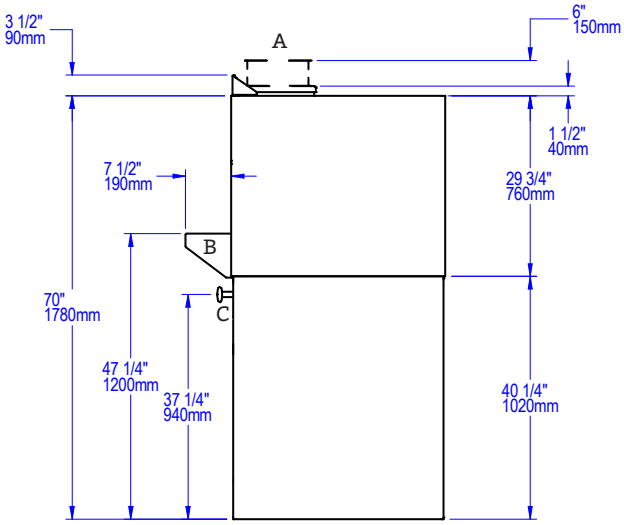

UTILITIES SPECIFICATIONS

GAS

Gas-Fired

¾ inch gas inlet (FNPT)

80,500 BTU/hr - Natural Gas (NG)

OR

68,000 BTU/hr - Propane (LP)

ELECTRICAL

Gas-Fired

120 VAC, 2 A, 60 Hz

Connection made on the back of the oven control box. Remove front panel for access; use utility knockouts (provided) to route gas and electrical supplies.

VENTING INFORMATION

The Bistro 4836 has a 10-inch O.D. flue collar and can be direct connected to a power-ventilated, grease-rated chimney or can be vented with a Listed Type 1 exhaust hood, or one constructed in accordance with NFPA 96 and all relevant local and national codes. The oven must be vented in accordance with all relevant local and national codes, and in a manner acceptable to the authority having jurisdiction.

Ship Weight: 1,850 lbs / 839 kg

Intertek
ANSI Z83.11:2016 Ed.4
CSA 1.8:2016 Ed.4

Intertek
ANSI/NSF 4:2016

t. 360.650.1111
tf. 800.988.8103
f. 360.650.1166

Wood Stone Corporation
1801 W. Bakerview Rd.
Bellingham, WA 98226 USA
info@woodstone-corp.com
woodstone-corp.com

REVISED: SUMMER 2021

An ongoing program of product improvement may require us to change specifications without notice.

WOOD STONE

WARNING Cancer and Reproductive Harm - www.P65Warnings.ca.gov

WOOD STONE

BISTRO LINE STORAGE BOXES

WS-BL-4343 model shown.

BISTRO LINE - STORAGE BOXES

Wood Stone's Storage Box is constructed of stainless steel. It slides easily into the oven stand and is easily removable for service access. The installed box rests on the oven stand, and the face of the box is flush to the base of the stand.

Model	Item #	Height	Width	Depth
WS-BL-3030	0-3030-BOX-SS	22.375" 568mm	23.25" 591mm	24" 610mm
WS-BL-4343	0-4343-BOX-SS	22.5" 572mm	34" 864mm	
WS-BL-4355				
WS-BL-4836	0-4836-BOX-SS	22.5" 572mm	39" 991mm	

WS-BL-3030 Storage Box

WS-BL-4343/4355 Storage Box

WS-BL-4836 Storage Box not shown.

t. 360.650.1111
tf. 800.988.8103
f. 360.650.1166

Wood Stone Corporation
1801 W. Bakerview Rd.
Bellingham, WA 98226 USA
info@woodstone-corp.com
woodstone-corp.com

REVISED: SUMMER 2021

An ongoing program of product improvement may require us to change specifications without notice.

WOOD STONE

WARNING Cancer and Reproductive Harm - www.P65Warnings.ca.gov

BISTRO LINE CERAMIC LOGSET

WOOD STONE

CERAMIC LOGSET

This realistic looking Ceramic Logset is designed for Bistro Line stone hearth ovens, providing the look of a wood-fired oven.

The logset comes with a protective stainless steel grate and fits neatly over the radiant burner. The lip of the grate also helps keep debris out of the burner.

For Bistro Line ovens, logsets are available for rear flame location only.

WS-BL-4836 model with Ceramic Logset shown.

WS-BL-3030

WS-BL-4343, 4355, 4836

Model	Item #
WS-BL-3030	000-3030-LOG
WS-BL-4343 WS-BL-4355 WS-BL-4836	000-4343-LOG

t. 360.650.1111
tf. 800.988.8103
f. 360.650.1166

Wood Stone Corporation
1801 W. Bakerview Rd.
Bellingham, WA 98226 USA
info@woodstone-corp.com
woodstone-corp.com

REVISED: SUMMER 2021

An ongoing program of product improvement may require us to change specifications without notice.

WOOD STONE

 WARNING Cancer and Reproductive Harm - www.P65Warnings.ca.gov

WOOD STONE

TRADITIONAL SERIES 5'
STONE HEARTH OVEN

Job Name	
Model	WS-TS-5
Item#	

WS-TS-5-RFG-IR model with standard arch shown.

The Traditional Series 5' oven features a door opening 29.75 inches wide x 10 inches high. The oven floor diameter is 52 inches, resulting in a 15-square-foot cooking surface. A tensioned steel exoskeleton surrounding the hearth and dome perimeter ensures structural integrity and longevity. Wrapped in spun ceramic fiber insulation and requiring only a 1-inch side clearance to combustibles, the monolithic 4-inch thick cast-ceramic hearth and monolithic 4-inch thick dome rest on an open black painted steel stand. The oven body is finished with a stainless steel mesh exterior to allow for field application of stucco or tile. A stainless steel service panel is provided. Information about alternate burner configurations, arches, stand wrap, tools and accessories can be found online at: woodstone-corp.com.

HEARTH CAPACITY

8" pizzas:	12–16
10" pizzas:	10–12
12" pizzas:	8
16" pizzas:	5

Assuming 5-minute cook times, the approximate maximum hourly production capacity can be calculated by multiplying the above numbers by 12. Cook times will also vary depending on "style" of pizza.

GUIDE TO MODEL NUMBERS

	Radiant Flame	Underfloor IR Burner	Wood Required	Combination	Natural Gas BTU/hr	Liquid Propane BTU/hr
WS-TS-5-RFG	X				-NG 105,000	-LP 94,000
WS-TS-5-RFG-W	X			X	-NG 105,000	-LP 94,000
WS-TS-5-RFG-IR	X	X			-NG 188,000	-LP 159,000
WS-TS-5-RFG-IR-W	X	X		X	-NG 188,000	-LP 159,000
WS-TS-5-W-IR		X	X		-NG 83,000	-LP 65,000
WS-TS-5-W			X			

FUEL CONFIGURATIONS

GAS-FIRED ONLY: Configured to burn either natural gas (NG) or liquid propane (LP).*

❑ **RADIANT FLAME (RFG):** Heated by an easily adjustable radiant flame (105,000 BTU/hr max. NG) located in the rear of the cooking chamber. User control ensures the ability to balance the oven's radiated top heat with the heat being conducted and radiated from the floor.

❑ **RADIANT FLAME + UNDERFLOOR IR (RFG-IR):** In addition to the radiant flame, a 83,000 BTU/hr (NG) thermostatically controlled infrared burner is mounted under the oven deck to ensure high production capacity with no heat recovery issues.

❑ **WOOD-FIRED (W):** Wood-fired only.

❑ **WOOD WITH GAS ASSIST (W-IR):** This wood-fired model is assisted by the additional BTUs of an Underfloor IR burner. **Note:** A wood fire is required with this configuration.

❑ **COMBINATION (-W):** Allows optional wood burning for ovens with gas burner configurations.* **Note:** Adding wood to an oven with an RFG burner will reduce available hearth capacity.

*Gas type must be specified at time of order.

Intertek
ANSI Z83.11:2016 Ed.4
CSA 1.8:2016 Ed.4

Intertek
ANSI/NSF 4:2016

t. 360.650.1111
tf. 800.988.8103
f. 360.650.1166

Wood Stone Corporation
1801 W. Bakerview Rd.
Bellingham, WA 98226 USA
info@woodstone-corp.com
woodstone-corp.com

REVISED: SUMMER 2021

An ongoing program of product improvement may require us to change specifications without notice.

WOOD STONE

WARNING Cancer and Reproductive Harm - www.P65Warnings.ca.gov

TRADITIONAL SERIES 5'
STONE HEARTH OVEN • WS-TS-5

A	Flue Collar
B	Mantle
C	Flame Height Control Knob
D	Digital Controller
E	Forklift Here
	Electrical Connection
F	Service Panel or Optional Storage Box
G	Gas Connection
	Must Be Left Removable for Service
	AIR INTAKE: Do Not Facade or Cover Over

PLAN VIEW

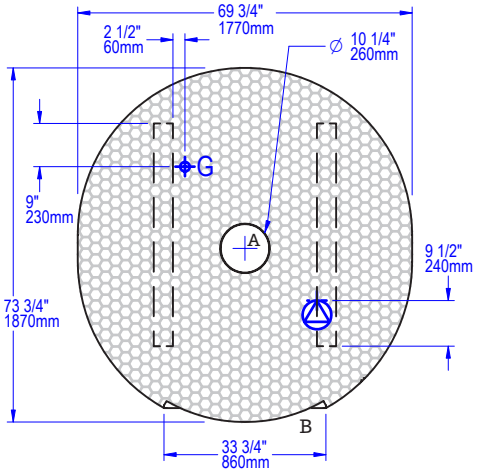

FACADE INFORMATION

- This oven ships "facade-ready." It is finished with a stainless wire mesh over the exterior dome ready for stucco/tile application by others.
- All facades or enclosures are by others.
- All TS ovens require a 1" side clearance and 14" top clearance to combustible construction. Any construction 6" to either side of the oven doorway and above must be non-combustible.
- Any facade or enclosure below the mantle of Gas-Fired or Combination ovens must allow for:
  - Unobstructed access for removal of service/intake panel.
  - Easy access to all controls.
  - Sufficient combustion air for gas burners; see Installation and Operation Manual for details.

FRONT VIEW

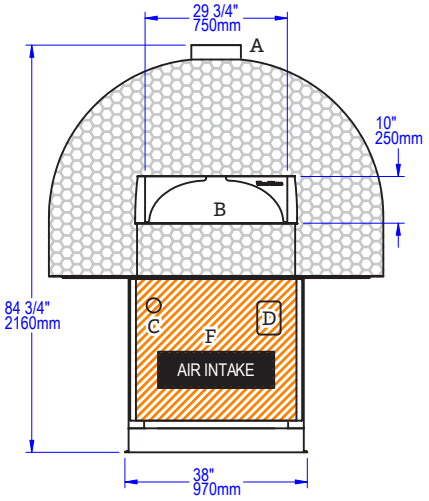

SIDE VIEW

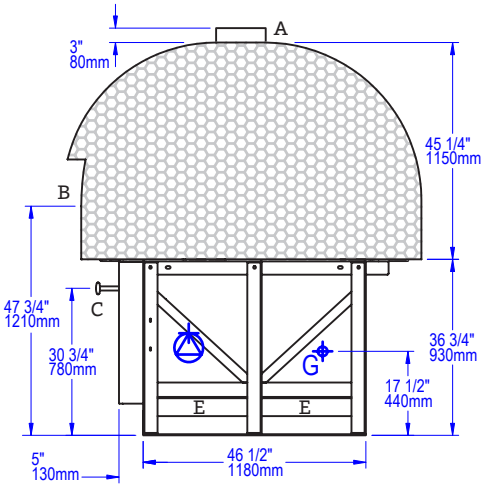

UTILITIES SPECIFICATIONS

GAS
¾ inch gas inlet (FNPT)

BTU/hr Requirements
See table on previous page

ELECTRICAL
Gas-Fired Only and Combination
120 VAC, 1.1 A, 50/60 Hz
Connection made beneath oven as shown.

Wood-Fired Only
120 VAC, 2 A, 50/60 Hz
Connection made to readout box.

VENTING INFORMATION

The Traditional Series 5' can be direct connected to a power-ventilated, grease-rated chimney or can be vented with a Listed Type 1 exhaust hood, or one constructed in accordance with NFPA 96 and all relevant local and national codes. The oven must be vented in accordance with all relevant local and national codes, and in a manner acceptable to the authority having jurisdiction.

Ship Weight: 3,600 lbs / 1,633 kg

Intertek
ANSI Z83.11:2016 Ed.4
CSA 1.8:2016 Ed.4

Intertek
ANSI/NSF 4:2016

t. 360.650.1111
tf. 800.988.8103
f. 360.650.1166

Wood Stone Corporation
1801 W. Bakerview Rd.
Bellingham, WA 98226 USA
info@woodstone-corp.com
woodstone-corp.com

REVISED: SUMMER 2021

An ongoing program of product improvement may require us to change specifications without notice.

WOOD STONE

WARNING Cancer and Reproductive Harm - www.P65Warnings.ca.gov

WOOD STONE

TRADITIONAL SERIES 6'
STONE HEARTH OVEN

Job Name	
Model	WS-TS-6
Item#	

WS-TS-6-RFG-IR model with standard arch shown.

The Traditional Series 6' oven features a door opening 36 inches wide x 10 inches high. The oven floor diameter is 62 inches, resulting in a 22-square-foot cooking surface. A tensioned steel exoskeleton surrounding the hearth and dome perimeter ensures structural integrity and longevity. Wrapped in spun ceramic fiber insulation and requiring only a 1-inch side clearance to combustibles, the monolithic 4-inch thick cast-ceramic hearth and monolithic 4-inch thick dome rest on an open black painted steel stand. The oven body is finished with a stainless steel mesh exterior to allow for field application of stucco or tile. A stainless steel service panel is provided. Information about alternate burner configurations, arches, stand wrap, tools and accessories can be found online at: woodstone-corp.com.

HEARTH CAPACITY

8" pizzas:	18–22
10" pizzas:	14–16
12" pizzas:	10-12
16" pizzas:	6-8

Assuming 5-minute cook times, the approximate maximum hourly production capacity can be calculated by multiplying the above numbers by 12. Cook times will also vary depending on "style" of pizza.

GUIDE TO MODEL NUMBERS

	Radiant Flame	Underfloor IR Burner	Wood Required	Combination	Natural Gas BTU/hr	Liquid Propane BTU/hr
WS-TS-6-RFG	X				-NG 105,000	-LP 94,000
WS-TS-6-RFG-W	X			X	-NG 105,000	-LP 94,000
WS-TS-6-RFG-IR	X	X			-NG 188,000	-LP 159,000
WS-TS-6-RFG-IR-W	X	X		X	-NG 188,000	-LP 159,000
WS-TS-6-W-IR		X	X		-NG 83,000	-LP 65,000
WS-TS-6-W			X			

FUEL CONFIGURATIONS

GAS-FIRED ONLY: Configured to burn either natural gas (NG) or liquid propane (LP).*

❑ **RADIANT FLAME (RFG):** Heated by an easily adjustable radiant flame (105,000 BTU/hr max. NG) located in the rear of the cooking chamber. User control ensures the ability to balance the oven's radiated top heat with the heat being conducted and radiated from the floor.

❑ **RADIANT FLAME + UNDERFLOOR IR (RFG-IR):** In addition to the radiant flame, a 83,000 BTU/hr (NG) thermostatically controlled infrared burner is mounted under the oven deck to ensure high production capacity with no heat recovery issues.

❑ **WOOD-FIRED (W):** Wood-fired only.

❑ **WOOD WITH GAS ASSIST (W-IR):** This wood-fired model is assisted by the additional BTUs of an Underfloor IR burner. **Note:** A wood fire is required with this configuration.

❑ **COMBINATION (-W):** Allows optional wood burning for ovens with gas burner configurations.* **Note:** Adding wood to an oven with an RFG burner will reduce available hearth capacity.

*Gas type must be specified at time of order.

Intertek
ANSI Z83.11:2016 Ed.4
CSA 1.8:2016 Ed.4

Intertek
ANSI/NSF 4:2016

t. 360.650.1111
tf. 800.988.8103
f. 360.650.1166

Wood Stone Corporation
1801 W. Bakerview Rd.
Bellingham, WA 98226 USA
info@woodstone-corp.com
woodstone-corp.com

REVISED: SUMMER 2021

An ongoing program of product improvement may require us to change specifications without notice.

WOOD STONE

WARNING Cancer and Reproductive Harm - www.P65Warnings.ca.gov

TRADITIONAL SERIES 6'
STONE HEARTH OVEN • WS-TS-6

A	Flue Collar
B	Mantle
C	Flame Height Control Knob
D	Digital Controller
E	Forklift Here
	Electrical Connection
F	Service Panel or Optional Storage Box
G	Gas Connection
	Must Be Left Removable for Service
	AIR INTAKE: Do Not Facade or Cover Over

PLAN VIEW

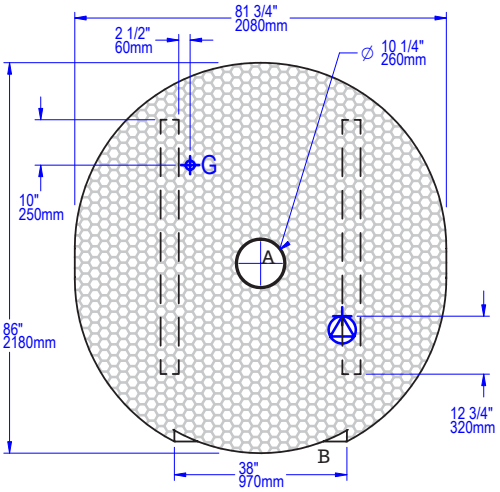

FACADE INFORMATION

- This oven ships "facade-ready." It is finished with a stainless wire mesh over the exterior dome ready for stucco/tile application by others.
- All facades or enclosures are by others.
- All TS ovens require a 1" side clearance and 14" top clearance to combustible construction. Any construction 6" to either side of the oven doorway and above must be non-combustible.
- Any facade or enclosure below the mantle of Gas-Fired or Combination ovens must allow for:
  - Unobstructed access for removal of service/intake panel.
  - Easy access to all controls.
  - Sufficient combustion air for gas burners; see Installation and Operation Manual for details.

FRONT VIEW

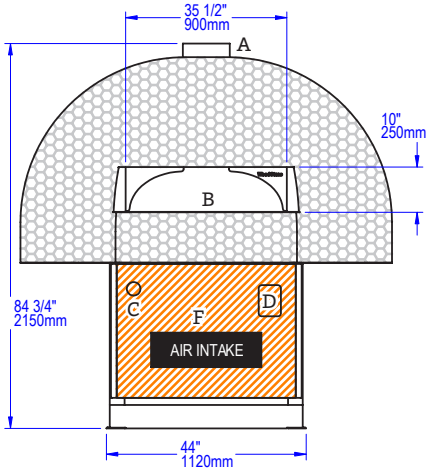

SIDE VIEW

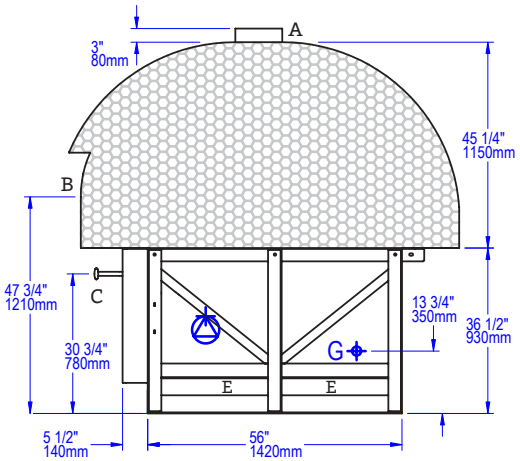

UTILITIES SPECIFICATIONS

GAS
¾ inch gas inlet (FNPT)

BTU/hr Requirements
See table on previous page

ELECTRICAL
Gas-Fired Only and Combination
120 VAC, 1.1 A, 50/60 Hz
Connection made beneath oven as shown.

Wood-Fired Only
120 VAC, 2 A, 50/60 Hz
Connection made to readout box.

VENTING INFORMATION

The Traditional Series 6' can be direct connected to a power-ventilated, grease-rated chimney or can be vented with a Listed Type 1 exhaust hood, or one constructed in accordance with NFPA 96 and all relevant local and national codes. The oven must be vented in accordance with all relevant local and national codes, and in a manner acceptable to the authority having jurisdiction.

Ship Weight: 4,600 lbs / 2,087 kg

Intertek
ANSI Z83.11:2016 Ed.4
CSA 1.8:2016 Ed.4

Intertek
ANSI/NSF 4:2016

t. 360.650.1111
tf. 800.988.8103
f. 360.650.1166

Wood Stone Corporation
1801 W. Bakerview Rd.
Bellingham, WA 98226 USA
info@woodstone-corp.com
woodstone-corp.com

REVISED: SUMMER 2021

An ongoing program of product improvement may require us to change specifications without notice.

WOOD STONE

WARNING Cancer and Reproductive Harm - www.P65Warnings.ca.gov

WOOD STONE

RICE COOKER
GAS FIRED

Job Name	
Model	WS-GRC-60
Item#	

WS-GRC-60 model shown.

FEATURES

- Cooks Rice & Grains in Convenient 1/3 Pans
- Consistent Quality Cook After Cook
- Cooks up to Three 1/3 Pans Independently for Flexibility
- Cooks Both Brown and White Rice at the Same Time
- High Volume Production: will provide 60 cups of cooked white rice in 23 minutes

The gas-fired Rice Cooker is a versatile high-performance solution that cooks rice and grains in 1/3 pans. It provides consistent results, cooking all varieties of white or brown rice. It can cook up to 3 separate pans independently, in any combination of white or brown rice. This flexibility allows the operator to cook smaller runs of rice when needed to reduce waste and maintain quality. By cooking in 1/3 pans, rice can go directly to the serving line, or a holding cabinet, without having to transfer product from a bulky cooking vessel. By reducing prep time, and cleanup time, the operator will realize substantial labor savings with this unit.

The Rice Cooker is an efficient gas-fired appliance, and uses less than 3,000 BTUs to cook a full pan of rice. Each 1/3 pan will produce 20 cups of cooked rice. Typical cook times for a full batch are around 23 minutes for white rice, 33 minutes for brown rice. These times can vary depending on the exact type of rice, individual preference and altitude. The control system provides adjustments to customize the cooking characteristics to meet your particular requirements.

The exterior and cooking zone are made from stainless steel for long life and durability. The 33,000 BTU/hr gas burner system utilizes high quality components for reliability, and is cheaper to operate than comparable electric units. The Rice Cooker is designed and built by Wood Stone to provide many years of high quality, consistent rice production with the flexibility required in today's competitive restaurant environment.

Patent Pending

Intertek
ANSI Z83.11:2016 Ed.4
CSA 1.8:2016 Ed.4

Intertek
ANSI/NSF 4:2016

t. 360.650.1111
tf. 800.988.8103
f. 360.650.1166

Wood Stone Corporation
1801 W. Bakerview Rd.
Bellingham, WA 98226 USA
info@woodstone-corp.com
woodstone-corp.com

REVISED: SUMMER 2021

An ongoing program of product improvement may require us to change specifications without notice.

WOOD STONE

WARNING Cancer and Reproductive Harm - www.P65Warnings.ca.gov

RICE COOKER
GAS-FIRED

PLAN VIEW
With Pans Removed

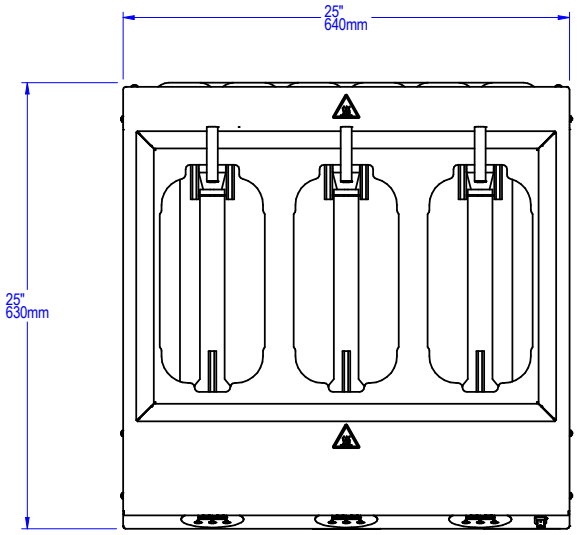

ISO VIEW

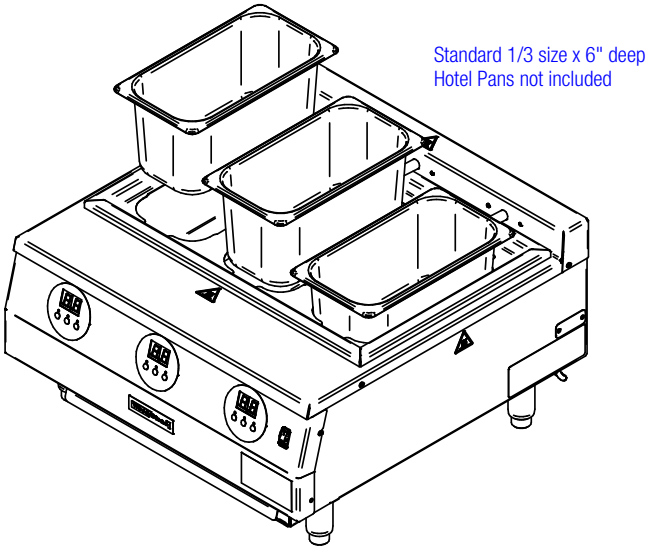

FRONT VIEW

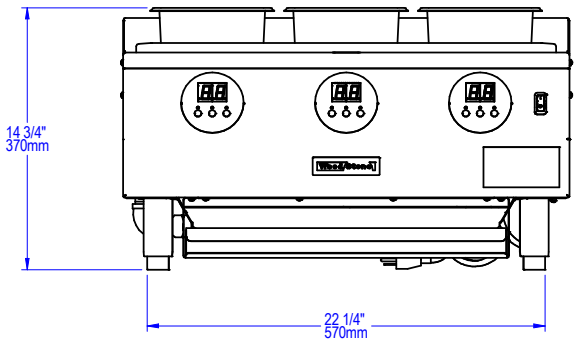

SIDE VIEW

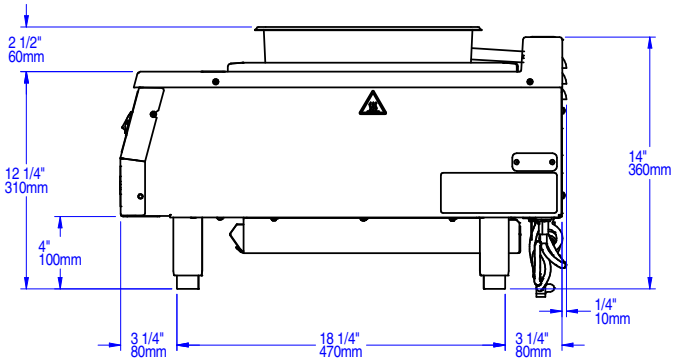

Unit weight: 77 lbs

UTILITIES SPECIFICATIONS

GAS
1/2 inch gas inlet (MNPT)
33,000 BTU/hr - Natural Gas (NG)
OR
33,000 BTU/hr - Propane (LP)

Maximum gas inlet pressure:
1/2 psi (14 inches W.C.)

ELECTRICAL
120 VAC, 0.5A, 50/60 Hz, 1 Phase

Equipped with a NEMA 5-15P plug for use with a standard 120 VAC, 15 A or 20 A outlet.

Refer to data plate when installing.

VENTING INFORMATION

The Wood Stone Rice Cooker must be vented in accordance with all relevant local and national codes, and in a manner acceptable to the authority having jurisdiction.

Intertek
ANSI Z83.11:2016 Ed.4
CSA 1.8:2016 Ed.4

Intertek
ANSI/NSF 4:2016

t. 360.650.1111
tf. 800.988.8103
f. 360.650.1166

Wood Stone Corporation
1801 W. Bakerview Rd.
Bellingham, WA 98226 USA
info@woodstone-corp.com
woodstone-corp.com

REVISED: SUMMER 2021

An ongoing program of product improvement may require us to change specifications without notice.

WOOD STONE

 WARNING Cancer and Reproductive Harm - www.P65Warnings.ca.gov

WOOD STONE

TANDOOR 31"
GAS-FIRED TANDOOR

Job Name	
Model	WS-GFT-31
Item#	

WS-GFT-31-Round Tandoor model shown.

FEATURES

- Cooks like Clay
- Long Lifespan
- Durable Ceramic Interior
- Consistent Reliable Heat
- 35" Model Also Available
- Round and Square Shapes Available
- Fits Through Standard Doorways

The Wood Stone gas-fired Tandoor features a cooking chamber that uses the same ultra-strong, high-temperature ceramic technology that we utilize in our stone hearth ovens.

The unit is available in a round, square and octagonal shape. The ceramic cooking chamber has a 12-inch opening and is encased in an insulated, stainless steel cabinet. The Tandoor is topped with an attractive and durable quartz composite that simulates the look of black granite. The entire unit sits on heavy-duty casters and includes a Naan Hook, Naan Scraper and Skewers.

The gas burner uses a pilot safety valve, equipped with a Piezo-Electric ignition system. The heat output of the burner can be adjusted from its highest setting to completely turned off (or any setting in between) by turning the Flame Height Control Knob, which is conveniently located on the top of the unit.

The Tandoor comes with a lightweight, ventilated lid for faster heat-up and a Skewer Indexing Ring to support and position skewers. A removable drip/debris pan is located beneath the unit.

Wood Stone Tandoors can be configured to burn Natural Gas or Propane—this should be specified at the time of order. Restraint anchors for a flexible gas supply line restraining cable are located beneath the unit. The 31-inch round footprint of this unit makes it easy to fit through standard doors and into an existing cook line.

The unit may be ordered with a caster riser assembly to increase the height of the Tandoor to 36 inches, enabling easy installation into a cooking suite.

Wood Stone 31" Tandoors arrive completely assembled, ETL Listed, ready to install and are made in the USA. Information about custom finishes, tools and accessories can be found online at: woodstone-corp.com.

Intertek
ANSI Z83.11:2016 Ed.4
CSA 1.8:2016 Ed.4

Intertek
ANSI/NSF 4:2016

t. 360.650.1111
tf. 800.988.8103
f. 360.650.1166

Wood Stone Corporation
1801 W. Bakerview Rd.
Bellingham, WA 98226 USA
info@woodstone-corp.com
woodstone-corp.com

REVISED: SUMMER 2021

An ongoing program of product improvement may require us to change specifications without notice.

WOOD STONE

WARNING Cancer and Reproductive Harm - www.P65Warnings.ca.gov

TANDOOR 31"

GAS-FIRED TANDOOR • WS-GFT-31

B	Removable Lid
C	Flame Height Control Knob
D	Removable Drip Tray
G	Gas Connection
	Must Be Left Removable for Service

PLAN VIEWS

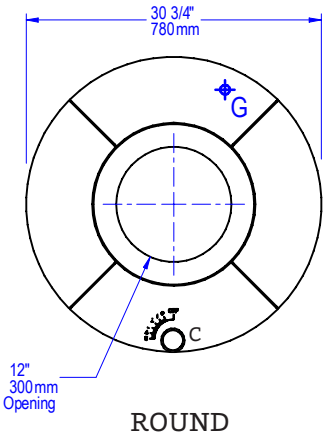

ROUND

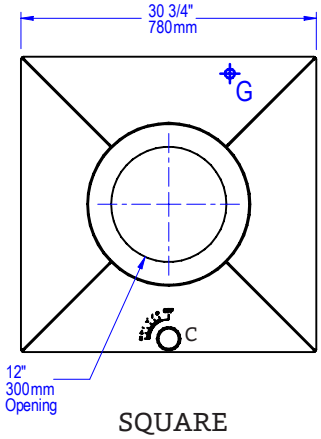

SQUARE

FRONT VIEW

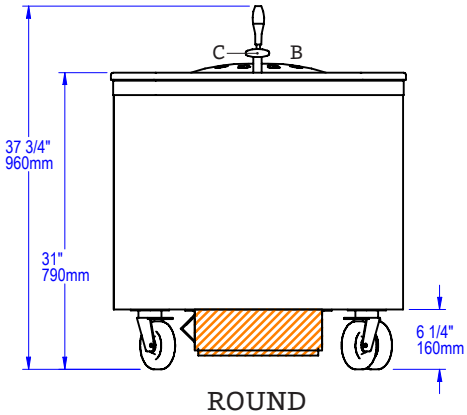

ROUND

SIDE VIEW

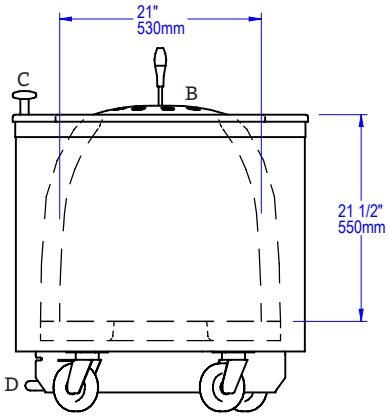

ROUND

UTILITIES SPECIFICATIONS

GAS
½ inch gas inlet (FNPT)
40,000 BTU/hr - Natural Gas (NG)
OR
40,000 BTU/hr - Propane (LP)

Note: Gas type must be specified at time of order.

VENTING INFORMATION

The Tandoor 31" must be vented with a Listed Type 1 exhaust hood, or one constructed in accordance with NFPA 96 and all relevant local and national codes. The oven must be vented in accordance with all relevant local and national codes, and in a manner acceptable to the authority having jurisdiction.

Ship Weight: 750 lbs / 340 kg

Intertek
ANSI Z83.11:2016 Ed.4
CSA 1.8:2016 Ed.4

Intertek
ANSI/NSF 4:2016

t. 360.650.1111
tf. 800.988.8103
f. 360.650.1166

Wood Stone Corporation
1801 W. Bakerview Rd.
Bellingham, WA 98226 USA
info@woodstone-corp.com
woodstone-corp.com

REVISED: SUMMER 2021

An ongoing program of product improvement may require us to change specifications without notice.

WOOD STONE

 WARNING Cancer and Reproductive Harm - www.P65Warnings.ca.gov

WOOD STONE

TANDOOR 35"
GAS-FIRED TANDOOR

Job Name	
Model	WS-GFT-35
Item#	

WS-GFT-35-Round Tandoor model shown.

FEATURES

- Cooks like Clay
- Long Lifespan
- Durable Ceramic Interior
- Consistent Reliable Heat
- 31" Model Also Available
- Round and Square Shapes Available

The Wood Stone gas-fired Tandoor features a cooking chamber that uses the same ultra-strong, high-temperature ceramic technology that we utilize in our stone hearth ovens.

The unit is available in a round, square and octagonal shape. The ceramic cooking chamber has a 13-inch opening and is encased in an insulated, stainless steel cabinet. The Tandoor is topped with an attractive and durable quartz composite that simulates the look of black granite. The entire unit sits on heavy-duty casters and includes a Naan Hook, Naan Scraper and Skewers.

The gas burner uses a pilot safety valve, equipped with a Piezo-Electric ignition system. The heat output of the burner can be adjusted from its highest setting to completely turned off (or any setting in between) by turning the Flame Height Control Knob, which is conveniently located on the top of the unit.

The Tandoor comes with a lightweight, ventilated lid for faster heat-up and a Skewer Indexing Ring to support and position skewers. A removable drip/debris pan is located beneath the unit.

Wood Stone Tandoors can be configured to burn Natural Gas or Propane—this should be specified at the time of order. Restraint anchors for a flexible gas supply line restraining cable are located beneath the unit.

The unit may be ordered with a caster riser assembly to increase the height of the Tandoor to 36 inches, to enable easy installation into a cooking suite.

Wood Stone 35" Tandoors arrive completely assembled, ETL Listed, ready to install and are made in the USA. Information about custom finishes, tools and accessories can be found online at: woodstone-corp.com.

Intertek
ANSI Z83.11:2016 Ed.4
CSA 1.8:2016 Ed.4

Intertek
ANSI/NSF 4:2016

t. 360.650.1111
tf. 800.988.8103
f. 360.650.1166

Wood Stone Corporation
1801 W. Bakerview Rd.
Bellingham, WA 98226 USA
info@woodstone-corp.com
woodstone-corp.com

REVISED: SUMMER 2021

An ongoing program of product improvement may require us to change specifications without notice.

WOOD STONE

WARNING Cancer and Reproductive Harm - www.P65Warnings.ca.gov

TANDOOR 35"

GAS-FIRED TANDOOR • WS-GFT-35

B	Removable Lid
C	Flame Height Control Knob
D	Removable Drip Tray
G	Gas Connection
	Must Be Left Removable for Service

PLAN VIEWS

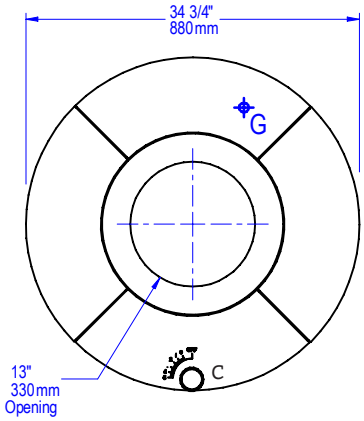

ROUND

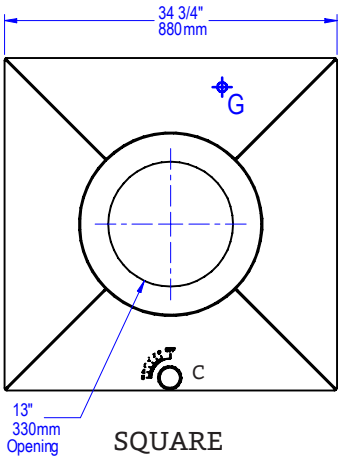

SQUARE

FRONT VIEW

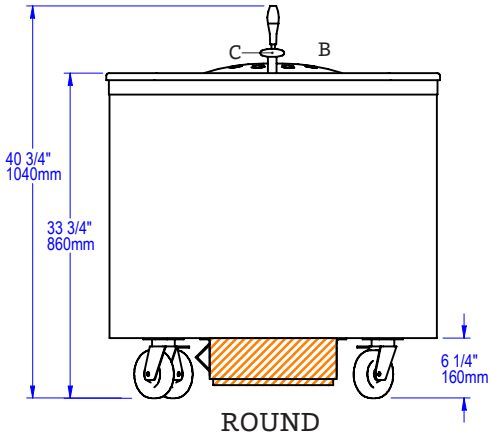

ROUND

SIDE VIEW

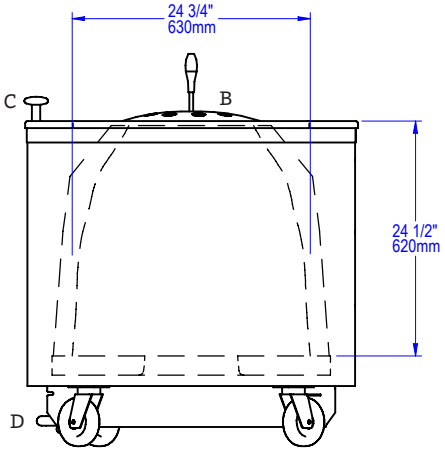

ROUND

UTILITIES SPECIFICATIONS

GAS
½ inch gas inlet (FNPT)
40,000 BTU/hr - Natural Gas (NG)
OR
40,000 BTU/hr - Propane (LP)

Note: Gas type must be specified at time of order.

VENTING INFORMATION

The Tandoor 35" must be vented with a Listed Type 1 exhaust hood, or one constructed in accordance with NFPA 96 and all relevant local and national codes. The oven must be vented in accordance with all relevant local and national codes, and in a manner acceptable to the authority having jurisdiction.

Ship Weight: 950 lbs / 431 kg

Intertek
ANSI Z83.11:2016 Ed.4
CSA 1.8:2016 Ed.4

Intertek
ANSI/NSF 4:2016

t. 360.650.1111
tf. 800.988.8103
f. 360.650.1166

Wood Stone Corporation
1801 W. Bakerview Rd.
Bellingham, WA 98226 USA
info@woodstone-corp.com
woodstone-corp.com

REVISED: SUMMER 2021

An ongoing program of product improvement may require us to change specifications without notice.

WOOD STONE

 WARNING Cancer and Reproductive Harm - www.P65Warnings.ca.gov

WOOD STONE

BARREL TANDOOR
GAS-FIRED TANDOOR

Job Name	
Model	WS-GFT-3521-BRL
Item#	

Custom Copper Powder Coat Finish shown.

FEATURES

- Cooks Like Clay
- Long Lifespan
- Durable Ceramic Interior
- Consistent Reliable Heat
- Custom Finishes Available

Standard Black Powder Coat Finish shown.

The Wood Stone gas-fired Barrel Tandoor features a cooking chamber that uses the same ultra-strong, high-temperature ceramic technology that we utilize in our stone hearth ovens.

The ceramic cooking chamber has a 12-inch opening. The fully insulated body is a standard black powder coat, and is available in a variety of custom powder coated finishes, as shown here in copper. The Tandoor is topped with an attractive and durable quartz composite that simulates the look of black granite. A Naan Hook, Naan Scraper and Skewers are included with the unit.

The gas burner uses a pilot safety valve, equipped with a Piezo-Electric ignition system. The heat output of the burner can be adjusted from its highest setting to completely turned off (or any setting in between) by turning the Flame Height Control Knob, which is located on top of the control box.

The Tandoor comes with a lightweight, ventilated lid for faster heat-up and a Skewer Indexing Ring to support and position skewers. A removable drip/debris pan is located beneath the unit.

Wood Stone Tandoors can be configured to burn Natural Gas or Propane—this should be specified at the time of order.

The Barrel Tandoor is supported by 4 legs which are adjustable to allow for leveling. An adjustable base trim piece is provided to seal the unit to the floor.

Wood Stone Barrel Tandoors arrive completely assembled, ETL Listed, ready to install, and are made in the USA. Information about custom finishes, tools and accessories can be found online at: woodstone-corp.com.

Intertek
ANSI Z83.11:2016 Ed.4
CSA 1.8:2016 Ed.4

Intertek
ANSI/NSF 4:2016

t. 360.650.1111
tf. 800.988.8103
f. 360.650.1166

Wood Stone Corporation
1801 W. Bakerview Rd.
Bellingham, WA 98226 USA
info@woodstone-corp.com
woodstone-corp.com

REVISED: SUMMER 2021

An ongoing program of product improvement may require us to change specifications without notice.

WOOD STONE

WARNING Cancer and Reproductive Harm - www.P65Warnings.ca.gov

BARREL TANDOOR

GAS-FIRED TANDOOR • WS-GFT-3521-BRL

B	Removable Lid
C	Flame Height Control Knob
D	Gas Control Box
G	Gas Connection
	Must Be Left Removable for Service

PLAN VIEW

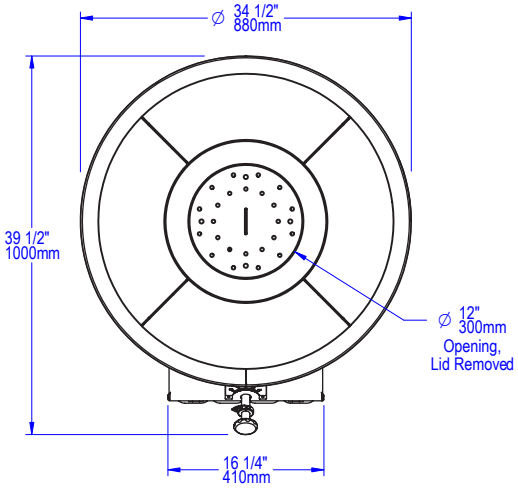

FRONT VIEW

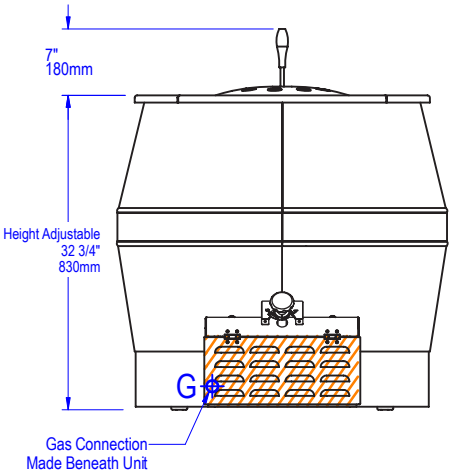

SIDE VIEW

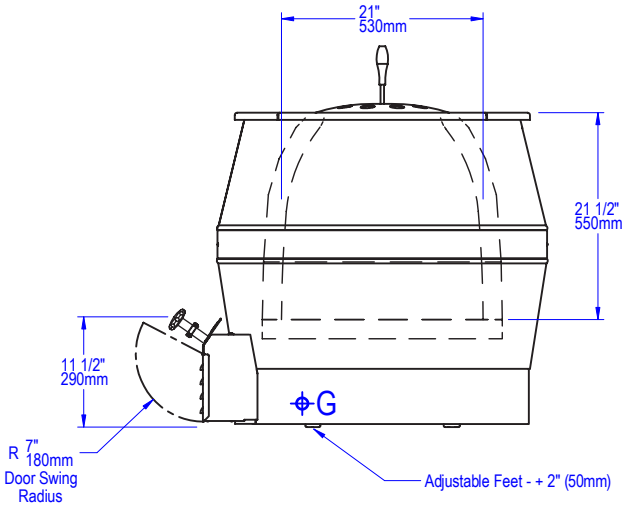

UTILITIES SPECIFICATIONS

GAS
½ inch gas inlet (FNPT)
40,000 BTU/hr - Natural Gas (NG)
OR
40,000 BTU/hr - Propane (LP)

Connection is made beneath the unit to the left of the gas control box.

Note: Gas type must be specified at time of order.

VENTING INFORMATION

The Barrel Tandoor must be vented with a Listed Type 1 exhaust hood, or one constructed in accordance with NFPA 96 and all relevant local and national codes. The oven must be vented in accordance with all relevant local and national codes, and in a manner acceptable to the authority having jurisdiction.

Ship Weight: 750 lbs / 340 kg

Intertek
ANSI Z83.11:2016 Ed.4
CSA 1.8:2016 Ed.4

Intertek
ANSI/NSF 4:2016

t. 360.650.1111
tf. 800.988.8103
f. 360.650.1166

Wood Stone Corporation
1801 W. Bakerview Rd.
Bellingham, WA 98226 USA
info@woodstone-corp.com
woodstone-corp.com

REVISED: SUMMER 2021

An ongoing program of product improvement may require us to change specifications without notice.

WOOD STONE

WOOD STONE

PITA BREAD OVEN
DUAL BURNER BISTRO

Job Name	
Model	WS-BL-(4343, 4355, 4836)-RFG-LR
Item#	

WS-BL-4343-RFG-LR model shown.

The Dual Burner 4343, 4355 and 4836 Bistro ovens feature a door opening 24 inches wide x 7.5 inches high. In the 4343 and 4355 Bistros, the cooking area is 26 inches wide x 34 or 46 inches deep, resulting in a 6- or 8.3-square-foot cooking surface respectively. The cooking area of the 4836 Bistro is 29 inches wide x 26.5 inches deep, resulting in a 5.4-square-foot cooking surface. All models feature a stainless steel mantle at the hearth.

Originally designed as high production flatbread ovens, the Dual Burner Bistros are also well suited for many other stone hearth cooking applications. The ovens feature two powerful, independently adjustable gas-fired radiant burners located on each side of the cooking chamber. Additionally, a burner disable switch allows operation with only one burner, further increasing their flexibility.

A tensioned steel exoskeleton surrounding the hearth and dome perimeters ensures structural integrity and longevity. Wrapped in spun ceramic fiber insulation and requiring only a 1-inch side clearance to combustibles, the monolithic 3-inch thick cast-ceramic hearths and monolithic 3-inch thick domes rest on painted black steel stands. The upper halves of the ovens are enclosed with stainless steel and the lower halves in a black painted finish.

The oven arrives completely assembled. However, using the optional Lifting System, the oven can be partially disassembled to fit through a 32-inch doorway—see the Installation and Operation Manual for details. It is ETL Listed, ready to install and is made in the USA.

Information about custom finishes, tools and accessories can be found online at: woodstone-corp.com.

HEARTH CAPACITY

	4343	4355	4836
6" pitas:	15	21	9
7" pitas:	12	15	9
9" pitas:	6	8	4
8" pizzas:	8	9–12	8
10" pizzas:	6	9	6
12" pizzas:	4	6	4

For pitas, assuming 90-second cook times, the approximate maximum hourly production capacity can be calculated by multiplying the above numbers by 40.

For pizza, assuming 5-minute cook times, the approximate maximum hourly production capacity can be calculated by multiplying the above numbers by 12. Cook times will also vary depending on "style" of pizza.

FEATURES

- Compact Footprint
- Visible Flame
- Low to Medium Production
- High-Temp Cooking
- 90 Second Pitas
- 3–5 Minute Pizzas

Intertek
ANSI Z83.11:2016 Ed.4
CSA 1.8:2016 Ed.4

Intertek
ANSI/NSF 4:2016

t. 360.650.1111
tf. 800.988.8103
f. 360.650.1166

Wood Stone Corporation
1801 W. Bakerview Rd.
Bellingham, WA 98226 USA
info@woodstone-corp.com
woodstone-corp.com

REVISED: SUMMER 2021

An ongoing program of product improvement may require us to change specifications without notice.

WOOD STONE

WARNING Cancer and Reproductive Harm - www.P65Warnings.ca.gov

PITA BREAD OVEN

DUAL BURNER BISTRO • WS-BL-(4343, 4355, 4836)-RFG-LR

Model	W	D
4343	42.5"	42.25"
4355	42.5"	54.25"
4836	47.75"	35.25"

A	Flue Collar
B	Mantle
C	Flame Height Control Knob
D	Digital Controller
E	Forklift Pockets
	Electrical Connection
G	Gas Connection
F	Service Panel or Optional Storage Box
	Must Be Left Removable for Service
	AIR INTAKE: Do Not Facade or Cover Over

PLAN VIEW

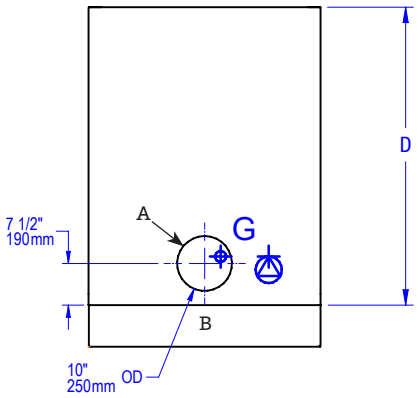

REAR VIEW

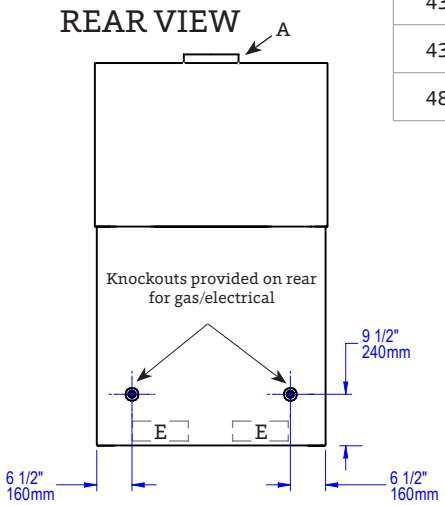

FRONT VIEW

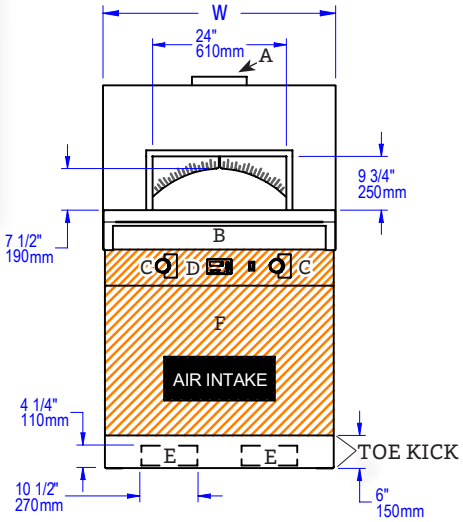

SIDE VIEW

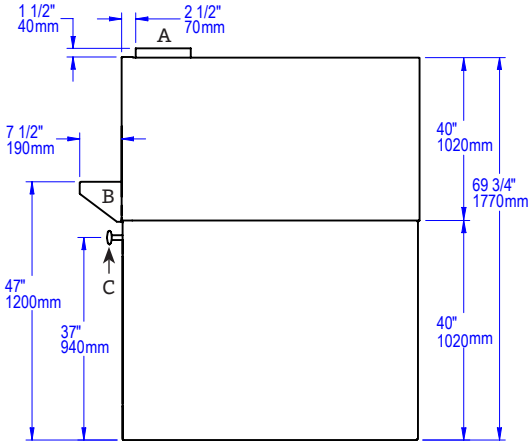

UTILITIES SPECIFICATIONS

GAS
¾ inch gas inlet (FNPT)
4343 & 4836:
105,000 BTU/hr - Natural Gas (NG)
100,000 BTU/hr - Propane (LP)
4355:
151,000 BTU/hr - Natural Gas (NG)
151,000 BTU/hr - Propane (LP)
Note: Gas type must be specified at time of order.

ELECTRICAL
120 VAC, 2 A, 50/60 Hz
All utility connections made on the back of the oven control box. Remove front panel for access; use rear utility knockouts (provided) to route gas and electrical supplies.

VENTING INFORMATION

The Dual Burner Bistro has a 10-inch O.D. flue collar and can be direct connected to a power-ventilated, grease-rated chimney or can be vented with a Listed Type 1 exhaust hood, or one constructed in accordance with NFPA 96 and all relevant local and national codes. The oven must be vented in accordance with all relevant local and national codes, and in a manner acceptable to the authority having jurisdiction.

Ship Weight: 4343/4836: 2,100 lbs/953 kg • 4355: 2,500 lbs/1134 kg

Intertek
ANSI Z83.11:2016 Ed.4
CSA 1.8:2016 Ed.4

Intertek
ANSI/NSF 4:2016

t. 360.650.1111
tf. 800.988.8103
f. 360.650.1166

Wood Stone Corporation
1801 W. Bakerview Rd.
Bellingham, WA 98226 USA
info@woodstone-corp.com
woodstone-corp.com

REVISED: SUMMER 2021

An ongoing program of product improvement may require us to change specifications without notice.

WOOD STONE

WARNING Cancer and Reproductive Harm - www.P65Warnings.ca.gov

WOOD STONE

BAGEL OVEN
FIRE DECK 90-112

Job Name	
Model	WS-CS-90-112
Item#	

WS-CS-90-112-RFG-RRR-IR configuration shown.

The Fire Deck 90-112 oven features a door opening 57 inches wide x 10 inches high. The cooking area is 68 inches wide x 96 inches deep, resulting in a 45-square-foot cooking surface. A tensioned steel exoskeleton surrounding the hearth and dome perimeter ensures structural integrity and longevity. Wrapped in spun ceramic fiber insulation and requiring only a 1-inch side clearance to combustibles, the monolithic 6-inch thick cast-ceramic hearth and monolithic 4-inch thick dome rest on a black painted steel stand. The oven body front, top, back and sides are finished with galvanized steel. The oven can be equipped with up to 3 radiant flame burners, typically 3 on the left or right side, as well as a thermostatically controlled Underfloor IR burner.

The oven arrives completely assembled, ETL Listed, ready to install and is made in the USA. A set of casters ship on the oven to assist with installation (remove once installed). Information about custom finishes, tools and accessories can be found online at: woodstone-corp.com.

HEARTH CAPACITY

8" pizzas:	74	16" pizzas:	19
10" pizzas:	54	18" pizzas:	12
12" pizzas:	35	5" bagels:	450-500/hr

Assuming 5-minute cook times, the approximate maximum hourly production capacity can be calculated by multiplying the above numbers by 12. Cook times will also vary depending on "style" of pizza. ***Note:*** *The addition of a decorative flame will decrease space and impact overall cooking capacity.*

GUIDE TO MODEL NUMBERS

	Underfloor IR Burner	Left Side Radiant Flame	Right Side Radiant Flame	Wood Optional	Wood Required	Natural Gas	Liquid Propane
WS-CS-90-112-RFG-LLL-IR	X	3				NG	LP
WS-CS-90-112-RFG-RRR-IR	X		3			NG	LP
WS-CS-90-112-RFG-LLL-IR-W	X	3		X		NG	LP
WS-CS-90-112-RFG-RRR-IR-W	X		3	X		NG	LP
WS-CS-90-112-RFG-LL-IR-W	X	2		X		NG	LP
WS-CS-90-112-RFG-RR-IR-W	X		2	X		NG	LP
WS-CS-90-112-W-IR	X				X	NG	LP
WS-CS-90-112-W					X	NG	LP

FUEL CONFIGURATIONS

GAS-FIRED ONLY: Configured to burn either natural gas (NG) or liquid propane (LP).*

- ❑ **RADIANT FLAME + UNDERFLOOR IR (RFG-IR):** Heated by up to three adjustable radiant flame burners typically located on one side of the cooking chamber along with a thermostatically controlled infrared burner which is mounted under the oven deck to ensure high production capacity without heat recovery issues.

❑ **WOOD-FIRED (W):** Wood-fired only.

❑ **WOOD WITH GAS ASSIST (W-IR):** This wood-fired model is assisted by the additional BTUs of an Underfloor IR burner. **Note:** A wood fire is required with this configuration.

❑ **COMBINATION (-W):** Allows optional wood burning for ovens with gas burner configurations.* **Note:** Adding wood to an oven with an RFG burner will reduce available hearth capacity.

*Gas type must be specified at time of order.

Intertek
ANSI Z83.11:2016 Ed.4
CSA 1.8:2016 Ed.4

Intertek
ANSI/NSF 4:2016

t. 360.650.1111
tf. 800.988.8103
f. 360.650.1166

Wood Stone Corporation
1801 W. Bakerview Rd.
Bellingham, WA 98226 USA
info@woodstone-corp.com
woodstone-corp.com

REVISED: SUMMER 2021

An ongoing program of product improvement may require us to change specifications without notice.

WOOD STONE

WARNING Cancer and Reproductive Harm - www.P65Warnings.ca.gov

BAGEL OVEN

STONE HEARTH OVEN • WS-CS-90-112

VERY IMPORTANT!
Oven is shipped with casters. Height with casters to the top of the flue collar is 87-3/4". Once the oven is in place the casters must be removed. Utility connections are made from underneath the oven. This view is showing a right-hand burner configuration. A left-hand burner configuration would mirror this location.

A	Flue Collar
B	Mantle
C	Flame Height Control Knob
D	Digital Controller
E	Forklift Pockets
	Electrical Connection
G	Gas Connection
F	Service Panel or Optional Storage Box
	Must Be Left Removable for Service
	AIR INTAKE: Do Not Facade or Cover Over

PLAN VIEW

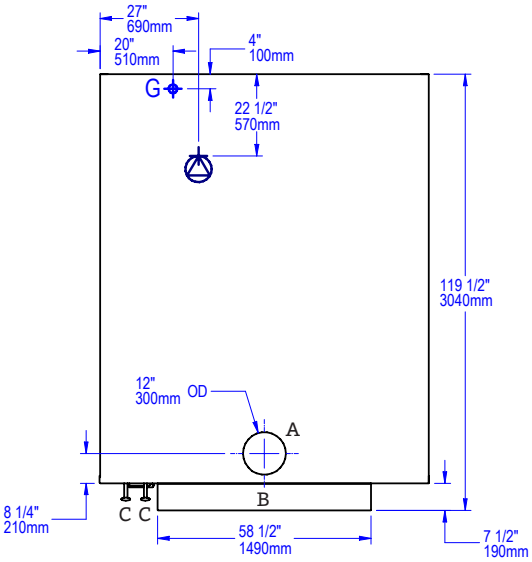

SIDE VIEW

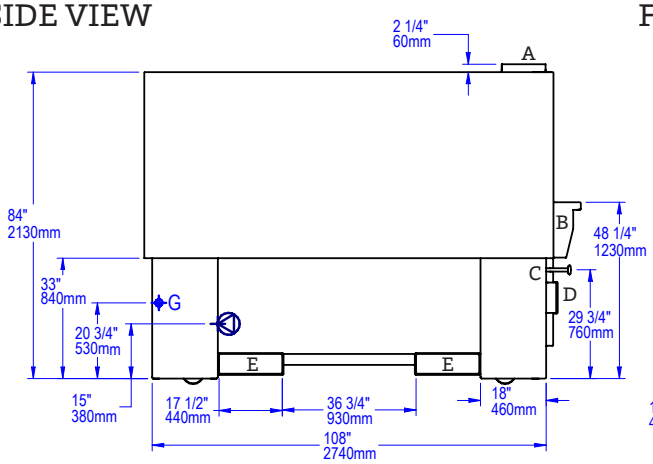

FRONT VIEW

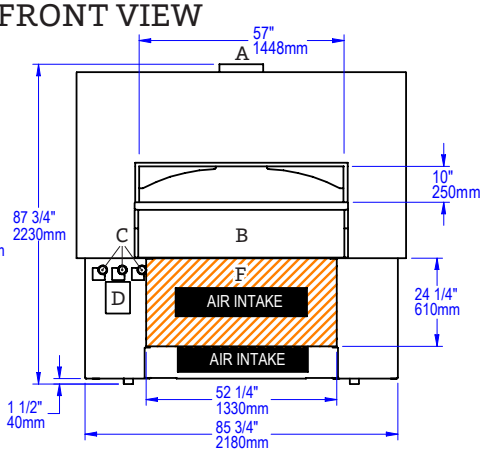

UTILITIES SPECIFICATIONS

GAS
Gas-Fired Only and Combination
1 inch gas inlet (FNPT)
244,000 BTU/hr - Natural Gas (NG)
OR
244,000 BTU/hr - Propane (LP)

	BTU Output Per Burner	
Radiant Flame Burner	70,000 NG	70,000 LP
IR Burner	103,000 NG	103,000 LP
Decorative Flame Adds	15,000 NG	15,000 LP

ELECTRICAL
Gas-Fired Only and Combination
120 VAC, 4 A, 50/60 Hz
Connection made underneath oven.

VENTING INFORMATION

The WS-CS-90-112 can be direct connected to a power-ventilated, grease-rated chimney or be vented using a Listed Type 1 exhaust hood, or a hood constructed and installed in accordance with NFPA 96 and all relevant local and national codes. The oven must be vented in accordance with all relevant local and national codes, and in a manner acceptable to the authority having jurisdiction.

Ship Weight: 11,500 lbs / 5,216 kg

Intertek
ANSI Z83.11:2016 Ed.4
CSA 1.8:2016 Ed.4

Intertek
ANSI/NSF 4:2016

t. 360.650.1111
tf. 800.988.8103
f. 360.650.1166

Wood Stone Corporation
1801 W. Bakerview Rd.
Bellingham, WA 98226 USA
info@woodstone-corp.com
woodstone-corp.com

REVISED: SUMMER 2021

An ongoing program of product improvement may require us to change specifications without notice.

WOOD STONE

WOOD STONE

COAL-FIRED OVEN
FIRE DECK 9660-CL

Job Name	
Model	WS-FD-9660-CL
Item#	

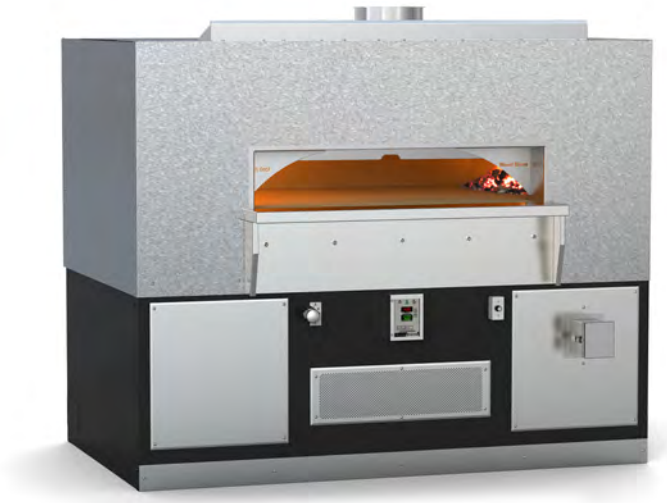

WS-FD-9660-RFG-L-IR-CL configuration shown (coal burns on right).

The Coal-Fired Fire Deck 9660 oven features a door opening 54 inches wide x 10 inches high. The cooking surface is 68 inches wide x 44 inches deep, resulting in a 21-square-foot cooking surface. The oven has been designed to achieve an excellent balance of top and bottom heat while burning coal. It incorporates an air plenum beneath the deck, enabling efficient combustion of the coal. This model utilizes one gas-fired wall of radiant flame (RFG) on one side of the oven opposite the coal fire and a thermostatically controlled gas Underfloor Infrared (IR) burner beneath the oven deck.

A tensioned steel exoskeleton surrounding the hearth and dome perimeter ensures structural integrity and longevity. Wrapped in spun ceramic fiber insulation and requiring only a 1-inch side clearance to combustibles, the monolithic cast-ceramic 4-inch thick hearth and monolithic 4-inch thick dome rest on a painted black steel stand. The oven body front, top, back and sides are finished with galvanized steel.

The oven arrives completely assembled, ETL Listed, ready to install and is made in the USA. A set of optional rigging casters is available to aid in the initial installation. Information about custom finishes, tools and accessories can be found online at: woodstone-corp.com.

HEARTH CAPACITY

8" pizzas:	32
10" pizzas:	18
12" pizzas:	12
16" pizzas:	6
18" pizzas:	4

Assuming 5-minute cook times, the approximate maximum hourly production capacity can be calculated by multiplying the above numbers by 12. Cook times will also vary depending on "style" of pizza.

FEATURES

- Rectangular Footprint
- Visible Flame
- High Production
- Coal and Gas-Fired
- Underfloor Infrared (IR) Burner
- Low Arch Wide
- Facade Friendly

GUIDE TO MODEL NUMBERS*

	Underfloor IR Burner	Left Side Radiant Flame Right Side Coal	Right Side Radiant Flame Left Side Coal	Natural Gas	Liquid Propane
WS-FD-9660-RFG-L-IR-CL	X	X		-NG	-LP
WS-FD-9660-RFG-R-IR-CL	X		X	-NG	-LP

*Model number indicates the location of the radiant flame. Coal will burn opposite the gas flame.

Intertek
ANSI Z83.11:2016 Ed.4
CSA 1.8:2016 Ed.4

Intertek
ANSI/NSF 4:2016

t. 360.650.1111
tf. 800.988.8103
f. 360.650.1166

Wood Stone Corporation
1801 W. Bakerview Rd.
Bellingham, WA 98226 USA
info@woodstone-corp.com
woodstone-corp.com

REVISED: SUMMER 2021

An ongoing program of product improvement may require us to change specifications without notice.

WOOD STONE

WARNING Cancer and Reproductive Harm - www.P65Warnings.ca.gov

COAL-FIRED OVEN

STONE HEARTH OVEN • WS-FD-9660-CL

Note: Drawings below are of a WS-FD-9660-RFG-L-IR-CL (radiant flame on left, coal on right).

A	Flue Collar
B	Mantle
C	Flame Height Control Knob
D	Digital Controller
E	Forklift Pockets
	Electrical Connection
F	Service Panel or Optional Storage Box
G	Gas Connection
H	Ash Chute
I	Coal Blower Fan Control
	Must Be Left Removable for Service
	AIR INTAKE: Do Not Facade or Cover Over

PLAN VIEW

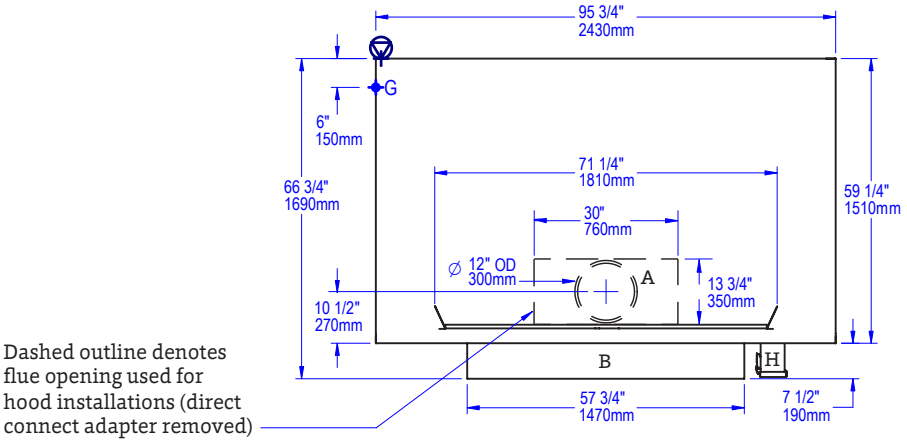

SIDE VIEW

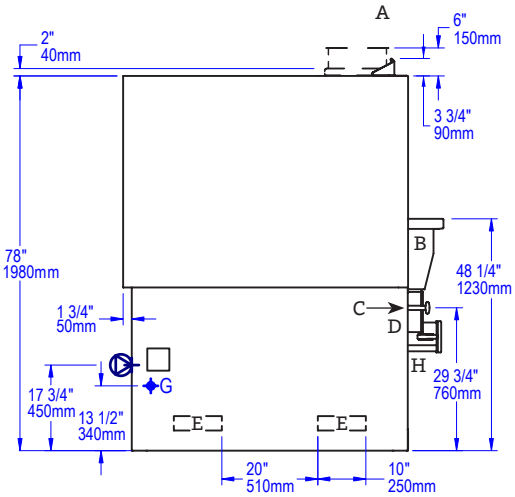

FRONT VIEW

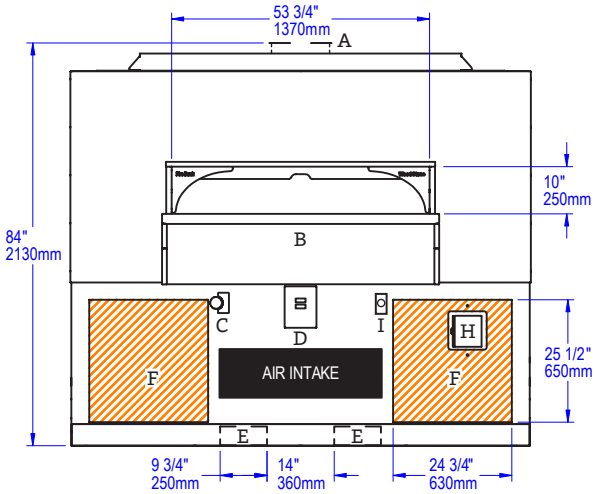

UTILITIES SPECIFICATIONS

GAS

Gas and Coal

1 inch gas inlet (FNPT)

225,000 BTU/hr - Natural Gas (NG)

OR

225,000 BTU/hr - Propane (LP)

ELECTRICAL

120 VAC, 4 A, 50/60 Hz

Connection made on left of oven as shown.

IMPORTANT: Models with -CL in the model number must be vented as a solid fuel appliance.

	BTU Ouput Per Burner	
Radiant Flame Burner	125,000 NG	125,000 LP
IR Burner	100,000 NG	100,000 LP

VENTING INFORMATION

The Fire Deck 9660-CL can be direct connected to a power-ventilated, grease-rated chimney or be vented using a Listed Type 1 exhaust hood, or a hood constructed and installed in accordance with NFPA 96 and all relevant local and national codes. This model must be vented as a solid fuel appliance. The oven must be vented in accordance with all relevant local and national codes, and in a manner acceptable to the authority having jurisdiction.

Ship Weight: 6,000 lbs / 2,722 kg

Intertek
ANSI Z83.11:2016 Ed.4
CSA 1.8:2016 Ed.4

Intertek
ANSI/NSF 4:2016

t. 360.650.1111
tf. 800.988.8103
f. 360.650.1166

Wood Stone Corporation
1801 W. Bakerview Rd.
Bellingham, WA 98226 USA
info@woodstone-corp.com
woodstone-corp.com

REVISED: SUMMER 2021

An ongoing program of product improvement may require us to change specifications without notice.

WOOD STONE

WARNING Cancer and Reproductive Harm - www.P65Warnings.ca.gov

WOOD STONE

COAL-FIRED OVEN
FIRE DECK 9690-CL

Job Name	
Model	WS-FD-9690-CL
Item#	

WS-FD-9690-RFG-LL-IR-CL configuration shown (coal burns on right).

The Coal-Fired Fire Deck 9690 oven features a door opening 60 inches wide x 10 inches high. The cooking surface is 68 inches wide x 77 inches deep, resulting in a 36-square-foot cooking surface. The oven has been designed to achieve an excellent balance of top and bottom heat while burning coal. It incorporates an air plenum beneath the deck, enabling efficient combustion of the coal. This model utilizes two radiant flame (RFG) burners on one side of the oven opposite the coal fire, and a thermostatically controlled gas Underfloor Infrared (IR) burner beneath the oven deck.

A tensioned steel exoskeleton surrounding the hearth and dome perimeter ensures structural integrity and longevity. Wrapped in spun ceramic fiber insulation and requiring only a 1-inch side clearance to combustibles, the monolithic cast-ceramic 6-inch thick hearth and monolithic 4-inch thick dome rest on a painted black steel stand. The oven body front, top, back and sides are finished with galvanized steel.

The oven arrives completely assembled, ETL Listed, ready to install and is made in the USA. A set of casters ship on the oven to assist with installation (remove once installed). Information about custom finishes, tools and accessories can be found online at: woodstone-corp.com.

HEARTH CAPACITY

8" pizzas:	48
10" pizzas:	28
12" pizzas:	20
16" pizzas:	12
18" pizzas:	6

Assuming 5-minute cook times, the approximate maximum hourly production capacity can be calculated by multiplying the above numbers by 12. Cook times will also vary depending on "style" of pizza.

FEATURES

- Rectangular Footprint
- Visible Flame
- High Production
- Coal and Gas-Fired
- Underfloor Infrared (IR) Burner
- Low Arch Wide
- Facade Friendly

GUIDE TO MODEL NUMBERS*

	Underfloor IR Burner	Left Side Radiant Flame Right Side Coal	Right Side Radiant Flame Left Side Coal	Natural Gas	Liquid Propane
WS-FD-9690-RFG-LL-IR-CL	X	2		-NG	-LP
WS-FD-9690-RFG-RR-IR-CL	X		2	-NG	-LP

*Model number indicates the location of the radiant flame. Coal will burn opposite the gas flame.

Intertek ANSI Z83.11:2016 Ed.4 CSA 1.8:2016 Ed.4

Intertek ANSI/NSF 4:2016

t. 360.650.1111
tf. 800.988.8103
f. 360.650.1166

Wood Stone Corporation
1801 W. Bakerview Rd.
Bellingham, WA 98226 USA
info@woodstone-corp.com
woodstone-corp.com

REVISED: SUMMER 2021

An ongoing program of product improvement may require us to change specifications without notice.

WOOD STONE

WARNING Cancer and Reproductive Harm - www.P65Warnings.ca.gov

COAL-FIRED OVEN

STONE HEARTH OVEN • WS-FD-9690-CL

VERY IMPORTANT!!
Oven is shipped with casters. Height with casters to the top of the flue collar is 87-3/4". Once the oven is in place the casters must be removed. Utility connections are made underneath the oven; they are shown on the plan view to illustrate geographic location only.

Note: Drawings below are of a WS-FD-9660-RFG-LL-IR-CL (radiant flame on left, coal on right).

A	Flue Collar
B	Mantle
C	Flame Height Control Knob
D	Digital Controller
E	Forklift Pockets
	Electrical Connection
F	Service Panel or Optional Storage Box
G	Gas Connection
H	Ash Chute
I	Coal Blower Fan Control
	Must Be Left Removable for Service
	AIR INTAKE: Do Not Facade or Cover Over

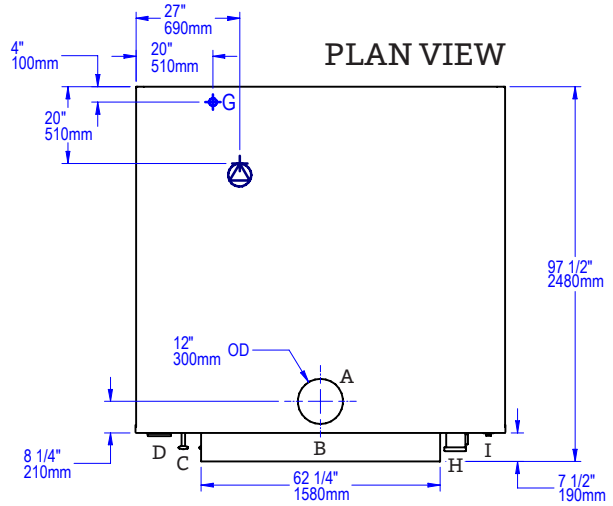

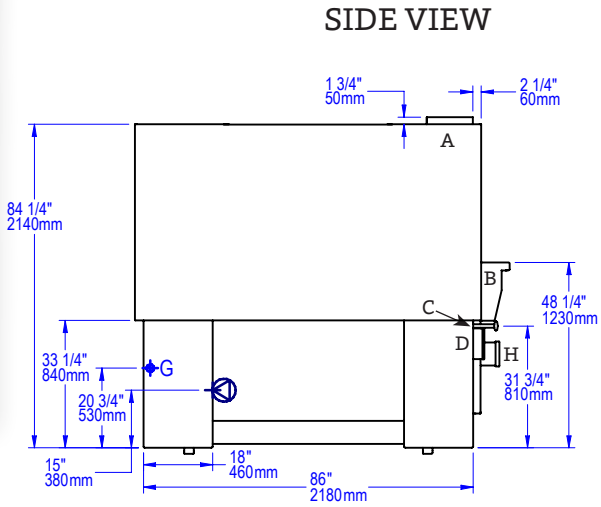

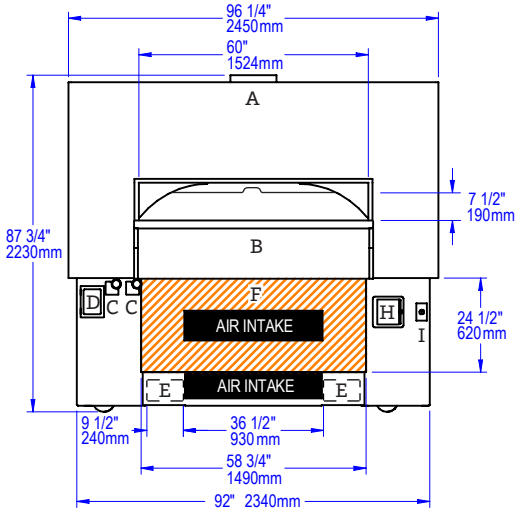

UTILITIES SPECIFICATIONS

GAS
Gas and Coal
1 inch gas inlet (FNPT)
347,000 BTU/hr - Natural Gas (NG)
OR
369,000 BTU/hr - Propane (LP)

ELECTRICAL
120 VAC, 4 A, 50/60 Hz
Connection made underneath oven.

IMPORTANT: Models with -CL in the model number must be vented as a solid fuel appliance.

	BTU Ouput Per Burner	
Radiant Flame Burner	123,000 NG	140,000 LP
IR Burner	100,000 NG	100,000 LP

VENTING INFORMATION

The Fire Deck 9690-CL can be direct connected to a power-ventilated, grease-rated chimney or be vented using a Listed Type 1 exhaust hood, or a hood constructed and installed in accordance with NFPA 96 and all relevant local and national codes. This model must be vented as a solid fuel appliance. The oven must be vented in accordance with all relevant local and national codes, and in a manner acceptable to the authority having jurisdiction.

Ship Weight: 10,000 lbs / 4,536 kg

Intertek
ANSI Z83.11:2016 Ed.4
CSA 1.8:2016 Ed.4

Intertek
ANSI/NSF 4:2016

t. 360.650.1111
tf. 800.988.8103
f. 360.650.1166

Wood Stone Corporation
1801 W. Bakerview Rd.
Bellingham, WA 98226 USA
info@woodstone-corp.com
woodstone-corp.com

REVISED: SUMMER 2021

An ongoing program of product improvement may require us to change specifications without notice.

WOOD STONE

WARNING Cancer and Reproductive Harm - www.P65Warnings.ca.gov

WOOD STONE

COAL-FIRED OVEN
FIRE DECK 11260-CL

Job Name	
Model	WS-FD-11260-CL
Item#	

WS-FD-11260-RFG-L-IR-CL configuration shown (coal burns on right).

The Coal-Fired Fire Deck 11260 oven features a door opening 54 inches wide x 10 inches high. The cooking surface is 84 inches wide x 44 inches deep, resulting in a 26-square-foot cooking surface. The oven has been designed to achieve an excellent balance of top and bottom heat while burning coal. It incorporates an air plenum beneath the deck, enabling efficient combustion of the coal. This model utilizes one gas-fired wall of radiant flame (RFG) on one side of the oven opposite the coal fire, and a thermostatically controlled gas Underfloor Infrared (IR) burner beneath the oven deck.

A tensioned steel exoskeleton surrounding the hearth and dome perimeter ensures structural integrity and longevity. Wrapped in spun ceramic fiber insulation and requiring only a 1-inch side clearance to combustibles, the monolithic cast-ceramic 4-inch thick hearth and monolithic 4-inch thick dome rest on a painted black steel stand. The oven body front, top, back and sides are finished with galvanized steel.

The oven arrives completely assembled, ETL Listed, ready to install and is made in the USA. A set of optional rigging casters is available to aid in the initial installation. Information about custom finishes, tools and accessories can be found online at: woodstone-corp.com.

HEARTH CAPACITY

8" pizzas:	42
10" pizzas:	22
12" pizzas:	15
16" pizzas:	8
18" pizzas:	6

Assuming 5-minute cook times, the approximate maximum hourly production capacity can be calculated by multiplying the above numbers by 12. Cook times will also vary depending on "style" of pizza.

FEATURES

- Rectangular Footprint
- Visible Flame
- High Production
- Coal and Gas-Fired
- Underfloor Infrared (IR) Burner
- Low Arch Wide
- Facade Friendly

GUIDE TO MODEL NUMBERS*

	Underfloor IR Burner	Left Side Radiant Flame Right Side Coal	Right Side Radiant Flame Left Side Coal	Natural Gas	Liquid Propane
WS-FD-11260-RFG-L-IR-CL	X	X		-NG	-LP
WS-FD-11260-RFG-R-IR-CL	X		X	-NG	-LP

*Model number indicates the location of the radiant flame. Coal will burn opposite the gas flame.

Intertek ANSI Z83.11:2016 Ed.4 CSA 1.8:2016 Ed.4

Intertek ANSI/NSF 4:2016

t. 360.650.1111
tf. 800.988.8103
f. 360.650.1166

Wood Stone Corporation
1801 W. Bakerview Rd.
Bellingham, WA 98226 USA
info@woodstone-corp.com
woodstone-corp.com

REVISED: SUMMER 2021

An ongoing program of product improvement may require us to change specifications without notice.

WOOD STONE

WARNING Cancer and Reproductive Harm - www.P65Warnings.ca.gov

COAL-FIRED OVEN

STONE HEARTH OVEN • WS-FD-11260-CL

Note: Drawings below are of a WS-FD-11260-RFG-L-IR-CL (radiant flame on left, coal on right).

A	Flue Collar
B	Mantle
C	Flame Height Control Knob
D	Digital Controller
E	Forklift Pockets
	Electrical Connection
F	Service Panel or Optional Storage Box
G	Gas Connection
H	Ash Chute
I	Coal Blower Fan Control
	Must Be Left Removable for Service
	AIR INTAKE: Do Not Facade or Cover Over

PLAN VIEW

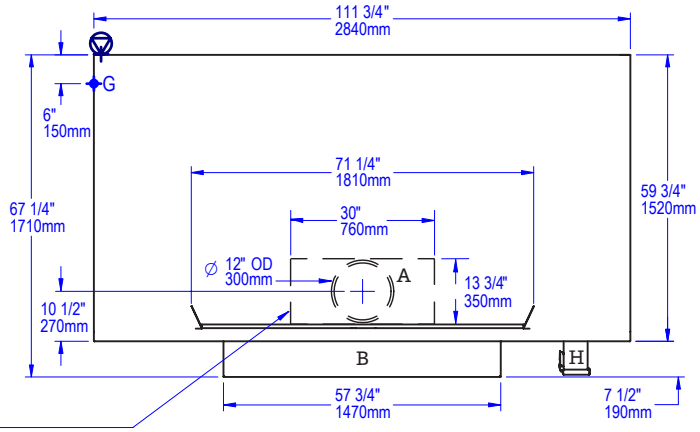

Dashed outline denotes flue opening used for hood installations (direct connect adapter removed)

SIDE VIEW

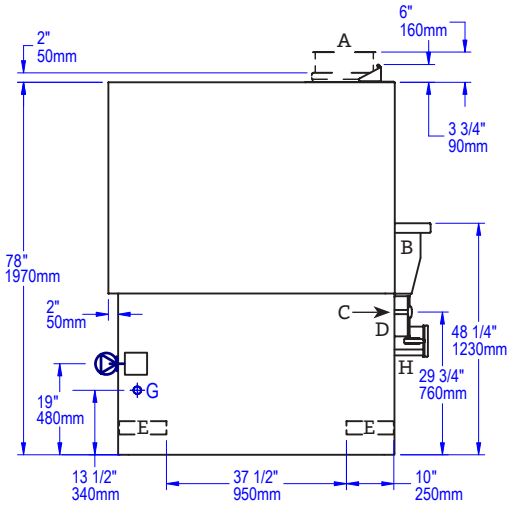

FRONT VIEW

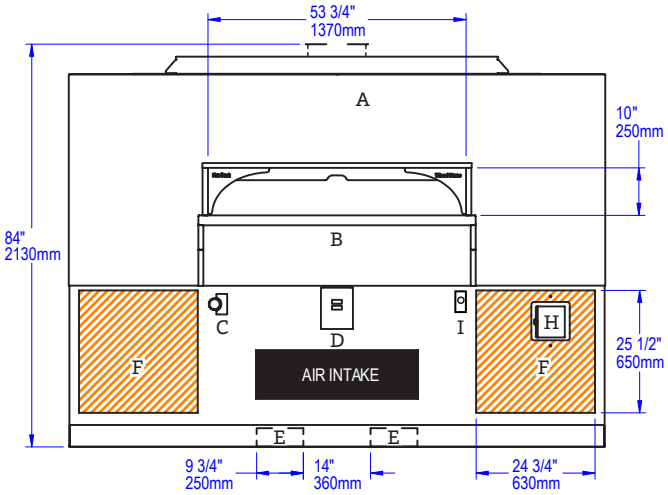

UTILITIES SPECIFICATIONS

GAS

Gas and Coal

1 inch gas inlet (FNPT)

225,000 BTU/hr - Natural Gas Supply

OR

225,000 BTU/hr - Propane (LP) Supply

ELECTRICAL

120 VAC, 4 A, 50/60 Hz

Connection made on left of oven as shown.

IMPORTANT: Models with -CL in the model number must be vented as a solid fuel appliance.

	BTU Ouput Per Burner	
Radiant Flame Burner	125,000 NG	125,000 LP
IR Burner	100,000 NG	100,000 LP

VENTING INFORMATION

The Fire Deck 11260-CL can be direct connected to a power-ventilated, grease-rated chimney or be vented using a Listed Type 1 exhaust hood, or a hood constructed and installed in accordance with NFPA 96 and all relevant local and national codes. This model must be vented as a solid fuel appliance. The oven must be vented in accordance with all relevant local and national codes, and in a manner acceptable to the authority having jurisdiction.

Ship Weight: 6,800 lbs / 3,084 kg

Intertek
ANSI Z83.11:2016 Ed.4
CSA 1.8:2016 Ed.4

Intertek
ANSI/NSF 4:2016

t. 360.650.1111
tf. 800.988.8103
f. 360.650.1166

Wood Stone Corporation
1801 W. Bakerview Rd.
Bellingham, WA 98226 USA
info@woodstone-corp.com
woodstone-corp.com

REVISED: SUMMER 2021

An ongoing program of product improvement may require us to change specifications without notice.

WOOD STONE

WARNING Cancer and Reproductive Harm - www.P65Warnings.ca.gov

WOOD STONE

COAL-FIRED OVEN
FIRE DECK 11275-CL

Job Name	
Model	WS-FD-11275-CL
Item#	

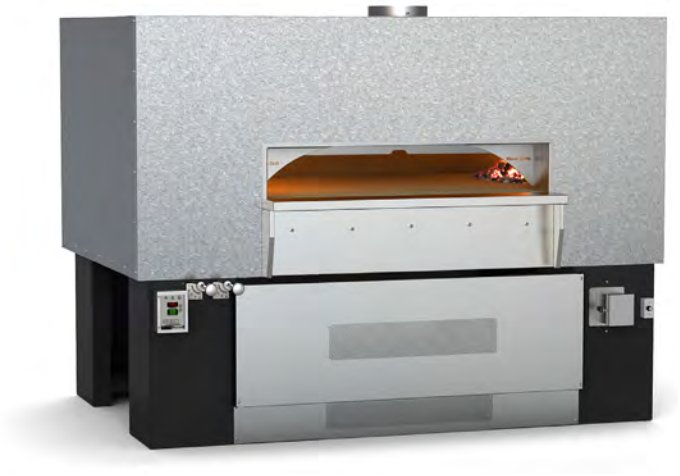

WS-FD-11275-RFG-LL-IR-CL configuration shown (coal burns on right).

The Coal-Fired Fire Deck 11275 oven features a door opening 60 inches wide x 10 inches high. The cooking surface is 79 inches wide x 63 inches deep, resulting in a 34-square-foot cooking surface. The oven has been designed to achieve an excellent balance of top and bottom heat while burning coal. It incorporates an air plenum beneath the deck, enabling efficient combustion of the coal. This model utilizes two radiant flame (RFG) burners on one side of the oven opposite the coal fire, and a thermostatically controlled gas Underfloor Infrared (IR) burner beneath the oven deck.

A tensioned steel exoskeleton surrounding the hearth and dome perimeter ensures structural integrity and longevity. Wrapped in spun ceramic fiber insulation and requiring only a 1-inch side clearance to combustibles, the monolithic cast-ceramic 6-inch thick hearth and monolithic 4-inch thick dome rest on a painted black steel stand. The oven body front, top, back and sides are finished with galvanized steel.

The oven arrives completely assembled, ETL Listed, ready to install and is made in the USA. A set of casters ship on the oven to assist with installation (remove once installed). Information about custom finishes, tools and accessories can be found online at: woodstone-corp.com.

HEARTH CAPACITY

8" pizzas:	56
10" pizzas:	48
12" pizzas:	35
16" pizzas:	12
18" pizzas:	12

Assuming 5-minute cook times, the approximate maximum hourly production capacity can be calculated by multiplying the above numbers by 12. Cook times will also vary depending on "style" of pizza.

FEATURES

- Rectangular Footprint
- Visible Flame
- High Production
- Coal and Gas-Fired
- Underfloor Infrared (IR) Burner
- Low Arch Wide
- Facade Friendly

GUIDE TO MODEL NUMBERS*

	Underfloor IR Burner	Left Side Radiant Flame Right Side Coal	Right Side Radiant Flame Left Side Coal	Natural Gas	Liquid Propane
WS-FD-11275-RFG-LL-IR-CL	X	2		-NG	-LP
WS-FD-11275-RFG-RR-IR-CL	X		2	-NG	-LP

*Model number indicates the location of the radiant flame. Coal will burn opposite the gas flame.

Intertek
ANSI Z83.11:2016 Ed.4
CSA 1.8:2016 Ed.4

Intertek
ANSI/NSF 4:2016

t. 360.650.1111
tf. 800.988.8103
f. 360.650.1166

Wood Stone Corporation
1801 W. Bakerview Rd.
Bellingham, WA 98226 USA
info@woodstone-corp.com
woodstone-corp.com

REVISED: SUMMER 2021

An ongoing program of product improvement may require us to change specifications without notice.

WOOD STONE

WARNING Cancer and Reproductive Harm - www.P65Warnings.ca.gov

COAL-FIRED OVEN

STONE HEARTH OVEN • WS-FD-11275-CL

VERY IMPORTANT!!
Oven is shipped with casters. Height with casters to the top of the flue collar is 87-3/4". Once the oven is in place the casters must be removed. Utility connections are made underneath the oven; they are shown on the plan view to illustrate geographic location only.

A	Flue Collar
B	Mantle
C	Flame Height Control Knob
D	Digital Controller
E	Forklift Pockets
	Electrical Connection
F	Service Panel or Optional Storage Box
G	Gas Connection
H	Ash Chute
I	Coal Blower Fan Control
	Must Be Left Removable for Service
	AIR INTAKE: Do Not Facade or Cover Over

PLAN VIEW

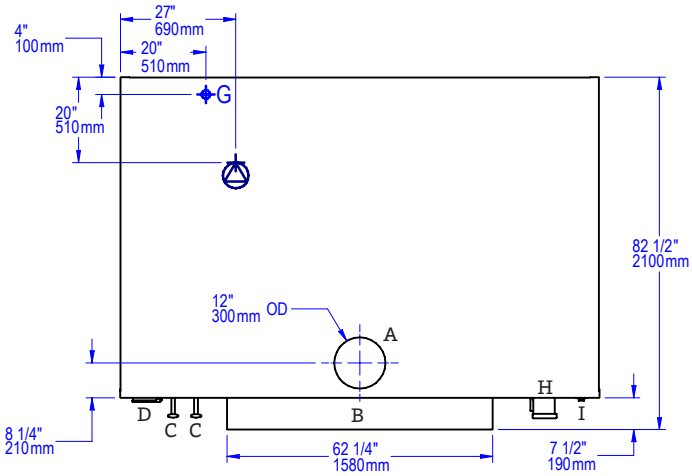

SIDE VIEW

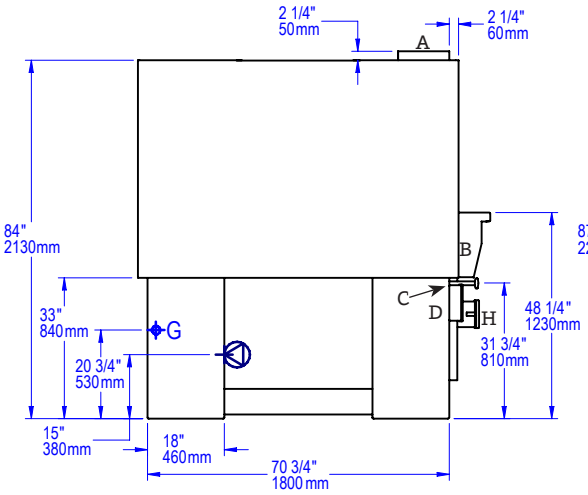

FRONT VIEW

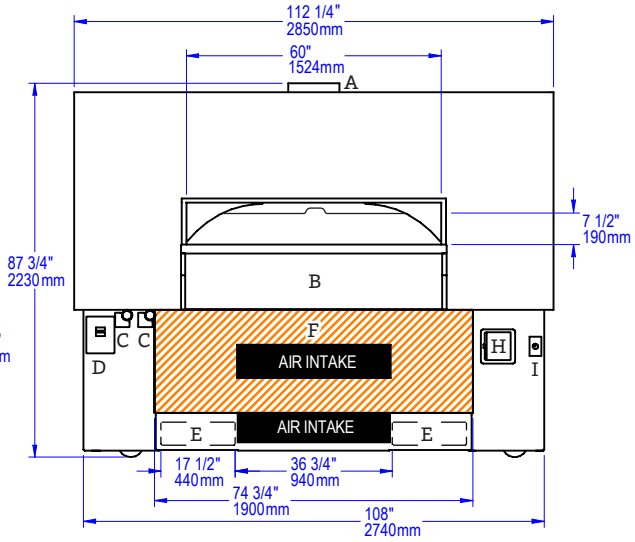

UTILITIES SPECIFICATIONS

GAS
Gas and Coal
1 inch gas inlet (FNPT)
315,000 BTU/hr - Natural Gas (NG)
OR
310,000 BTU/hr - Propane (LP)

ELECTRICAL
120 VAC, 4 A, 50/60 Hz
Connection made underneath oven.

IMPORTANT: Models with -CL in the model number must be vented as a solid fuel appliance.

	BTU Ouput Per Burner	
Radiant Flame Burner	107,500 NG	105,000 LP
IR Burner	100,000 NG	100,000 LP

VENTING INFORMATION

The Fire Deck 11275-CL can be direct connected to a power-ventilated, grease-rated chimney or be vented using a Listed Type 1 exhaust hood, or a hood constructed and installed in accordance with NFPA 96 and all relevant local and national codes. This model must be vented as a solid fuel appliance. The oven must be vented in accordance with all relevant local and national codes, and in a manner acceptable to the authority having jurisdiction.

Ship Weight: 9,500 lbs / 4,309 kg

Intertek
ANSI Z83.11:2016 Ed.4
CSA 1.8:2016 Ed.4

Intertek
ANSI/NSF 4:2016

t. 360.650.1111
tf. 800.988.8103
f. 360.650.1166

Wood Stone Corporation
1801 W. Bakerview Rd.
Bellingham, WA 98226 USA
info@woodstone-corp.com
woodstone-corp.com

REVISED: SUMMER 2021

An ongoing program of product improvement may require us to change specifications without notice.

WOOD STONE

WARNING Cancer and Reproductive Harm - www.P65Warnings.ca.gov

WOOD STONE

COAL-FIRED OVEN
FIRE DECK 11290-CL

Job Name	
Model	WS-FD-11290-CL
Item#	

WS-FD-11290-RFG-LL-IR-CL configuration shown (coal burns on right).

The Coal-Fired Fire Deck 11290 oven features a door opening 60 inches wide x 10 inches high. The cooking surface is 79 inches wide x 78 inches deep, resulting in a 43-square-foot cooking surface. The oven has been designed to achieve an excellent balance of top and bottom heat while burning coal. It incorporates an air plenum beneath the deck, enabling efficient combustion of the coal. This model utilizes two radiant flame (RFG) burners on one side of the oven opposite the coal fire, and a thermostatically controlled gas Underfloor Infrared (IR) burner beneath the oven deck.

A tensioned steel exoskeleton surrounding the hearth and dome perimeter ensures structural integrity and longevity. Wrapped in spun ceramic fiber insulation and requiring only 1-inch side clearance to combustibles, the monolithic cast-ceramic 6-inch thick hearth and monolithic 4-inch thick dome rest on a painted black steel stand. The oven body front, top, back and sides are finished with galvanized steel.

The oven arrives completely assembled, ETL Listed, ready to install and is made in the USA. A set of casters ship on the oven to assist with installation (remove once installed). Information about custom finishes, tools and accessories can be found online at: woodstone-corp.com.

HEARTH CAPACITY

8" pizzas:	56
10" pizzas:	40
12" pizzas:	28
16" pizzas:	16
18" pizzas:	9

Assuming 5-minute cook times, the approximate maximum hourly production capacity can be calculated by multiplying the above numbers by 12. Cook times will also vary depending on "style" of pizza.

FEATURES

- Rectangular Footprint
- Visible Flame
- High Production
- Coal and Gas-Fired
- Underfloor Infrared (IR) Burner
- Low Arch Wide
- Facade Friendly

GUIDE TO MODEL NUMBERS*

	Underfloor IR Burner	Left Side Radiant Flame Right Side Coal	Right Side Radiant Flame Left Side Coal	Natural Gas	Liquid Propane
WS-FD-11290-RFG-LL-IR-CL	X	2		-NG	-LP
WS-FD-11290-RFG-RR-IR-CL	X		2	-NG	-LP

*Model number indicates the location of the radiant flame. Coal will burn opposite the gas flame.

Intertek ANSI Z83.11:2016 Ed.4 CSA 1.8:2016 Ed.4

Intertek ANSI/NSF 4:2016

t. 360.650.1111
tf. 800.988.8103
f. 360.650.1166

Wood Stone Corporation
1801 W. Bakerview Rd.
Bellingham, WA 98226 USA
info@woodstone-corp.com
woodstone-corp.com

REVISED: SUMMER 2021

An ongoing program of product improvement may require us to change specifications without notice.

WOOD STONE

WARNING Cancer and Reproductive Harm - www.P65Warnings.ca.gov

COAL-FIRED OVEN

STONE HEARTH OVEN • WS-FD-11290-CL

VERY IMPORTANT!!
Oven is shipped with casters. Height with casters to the top of the flue collar is 87-3/4". Once the oven is in place the casters must be removed. Utility connections are made underneath the oven; they are shown on the plan view to illustrate geographic location only.

A	Flue Collar
B	Mantle
C	Flame Height Control Knob
D	Digital Controller
E	Forklift Pockets
	Electrical Connection
F	Service Panel or Optional Storage Box
G	Gas Connection
H	Ash Chute
I	Coal Blower Fan Control
	Must Be Left Removable for Service
	AIR INTAKE: Do Not Facade or Cover Over

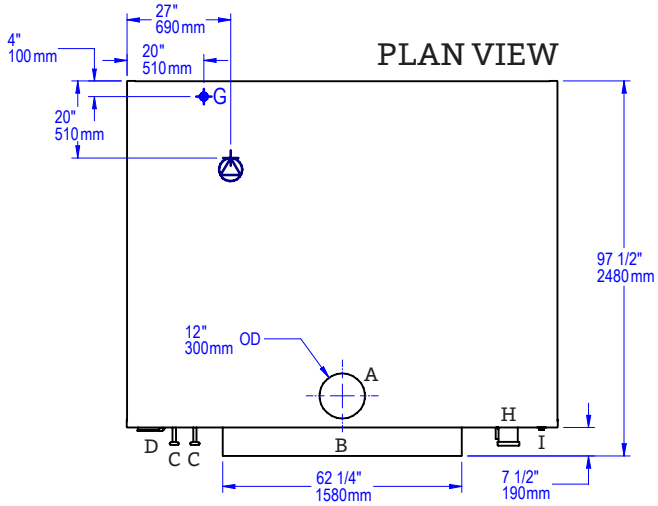

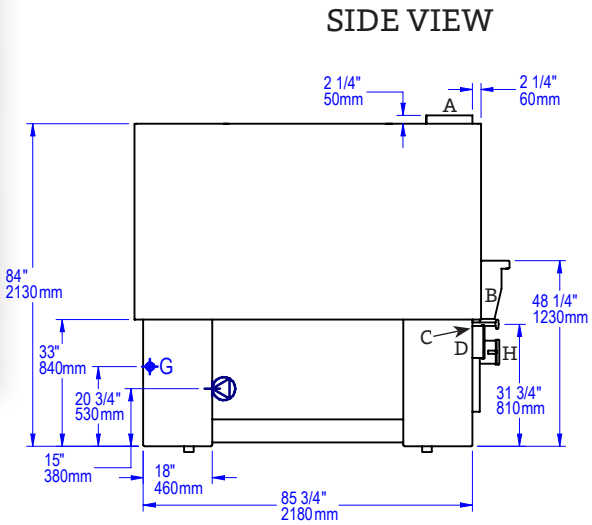

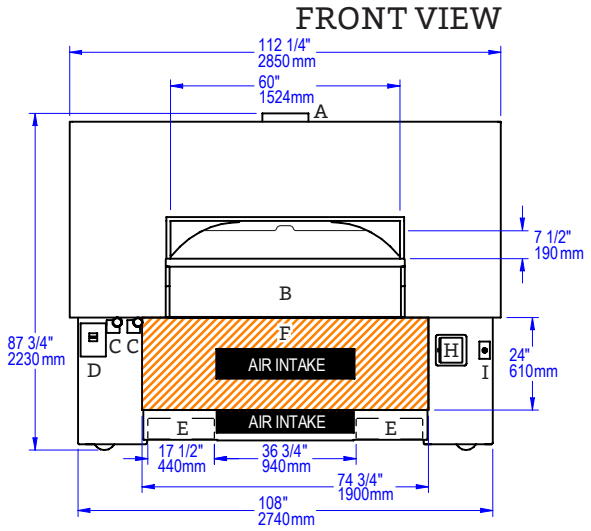

UTILITIES SPECIFICATIONS

GAS
Gas and Coal
1 inch gas inlet (FNPT)
343,000 BTU/hr - Natural Gas (NG)
OR
365,000 BTU/hr - Propane (LP)

ELECTRICAL
120 VAC, 4 A, 50/60 Hz
Connection made underneath oven.

IMPORTANT: Models with -CL in the model number must be vented as a solid fuel appliance.

	BTU Output Per Burner	
Radiant Flame Burner	123,000 NG	140,000 LP
IR Burner	100,000 NG	100,000 LP

VENTING INFORMATION

The Fire Deck 11290-CL can be direct connected to a power-ventilated, grease-rated chimney or be vented using a Listed Type 1 exhaust hood, or a hood constructed and installed in accordance with NFPA 96 and all relevant local and national codes. This model must be vented as a solid fuel appliance. The oven must be vented in accordance with all relevant local and national codes, and in a manner acceptable to the authority having jurisdiction.

Ship Weight: 11,500 lbs / 5,216 kg

Intertek
ANSI Z83.11:2016 Ed.4
CSA 1.8:2016 Ed.4

Intertek
ANSI/NSF 4:2016

t. 360.650.1111
tf. 800.988.8103
f. 360.650.1166

Wood Stone Corporation
1801 W. Bakerview Rd.
Bellingham, WA 98226 USA
info@woodstone-corp.com
woodstone-corp.com

REVISED: SUMMER 2021

An ongoing program of product improvement may require us to change specifications without notice.

WOOD STONE

 WARNING Cancer and Reproductive Harm - www.P65Warnings.ca.gov

THIS PAGE INTENTIONALLY LEFT BLANK

REVISED: SUMMER 2021

An ongoing program of product improvement may require us to change specifications without notice.

THIS PAGE INTENTIONALLY LEFT BLANK

REVISED: SUMMER 2021

An ongoing program of product improvement may require us to change specifications without notice.

THIS PAGE INTENTIONALLY LEFT BLANK

REVISED: SUMMER 2021

An ongoing program of product improvement may require us to change specifications without notice.

THIS PAGE INTENTIONALLY LEFT BLANK

REVISED: SUMMER 2021

An ongoing program of product improvement may require us to change specifications without notice.

WOOD STONE

GAS PLANCHA 24"
HIGH-TEMPERATURE GRIDDLE

Job Name	
Model	WS-GPL-2436-CT01
Item#	

WS-GPL-2436-CT01 model shown.

A high performance alternative to a standard flat top griddle, the Wood Stone Gas Plancha brings the power and caramelization of a gas charbroiler to a direct contact cooking surface. The highly engineered Gas Plancha delivers heat when and where it is needed with two thermostatically controlled and individually adjustable zones. This allows the Wood Stone Gas Plancha to support a range of cooking temperatures simultaneously.

The 3/4-inch thick smooth steel cooking surface is heated by two 30,000 BTU/hr burners. The Gas Plancha utilizes an amazingly responsive proprietary control system developed by Wood Stone, which provides uniform, consistent temperature control across the entire cook surface. Heat-recovery is fast, even under the most demanding loads.

The surface of the Gas Plancha can be used like a griddle as a direct contact cooking surface for searing or sautéing. With a temperature range from 150° F to 650° F, it's well suited to a wide variety of culinary applications with higher temperature ranges, allowing you to achieve the color and flavor of a chargrill.

The Gas Plancha features a small footprint that measures 24 inches x 36 inches with a 24-inch x 24-inch cooking surface. Supported by four legs, it is intended for installation on a suitable countertop or on the optional stand with front locking casters, available from Wood Stone.

The Gas Plancha must be vented with a Listed Type 1 exhaust hood, or one constructed in accordance with NFPA 96 and all relevant local and national codes.

The Gas Plancha arrives completely assembled, ready to install, and is made in the USA.

Note: At this time, this product is only available in North America.

FEATURES

- Two Heat Zones
- Temperature Range of 150° F to 650° F
- Stainless Steel Backsplash
- Removable Drip Tray
- Optional Stand with Casters Available

Intertek ANSI Z83.11 CSA 1.8

Intertek ANSI/NSF 4

t. 360.650.1111
tf. 800.988.8103
f. 360.650.1166

Wood Stone Corporation
1801 W. Bakerview Rd.
Bellingham, WA 98226 USA
info@woodstone-corp.com
woodstone-corp.com

REVISED: WINTER 2023

An ongoing program of product improvement may require us to change specifications without notice.

WOOD STONE

WARNING Cancer and Reproductive Harm - www.P65Warnings.ca.gov

GAS PLANCHA 24"

HIGH-TEMPERATURE GRIDDLE • WS-GPL-2436-CT01

PLAN VIEW

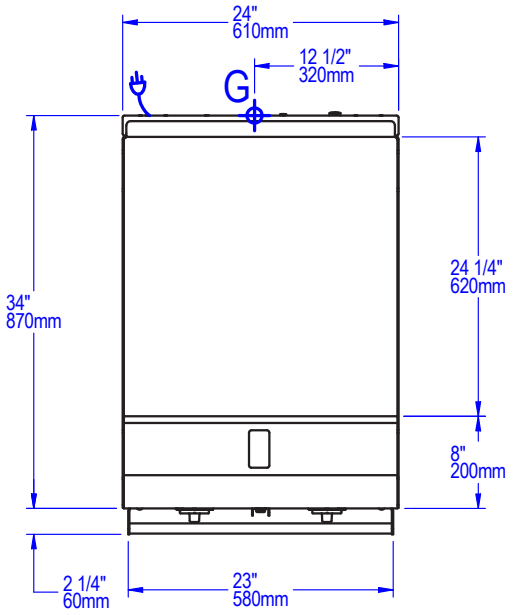

SIDE VIEW W/ OPTIONAL STAND

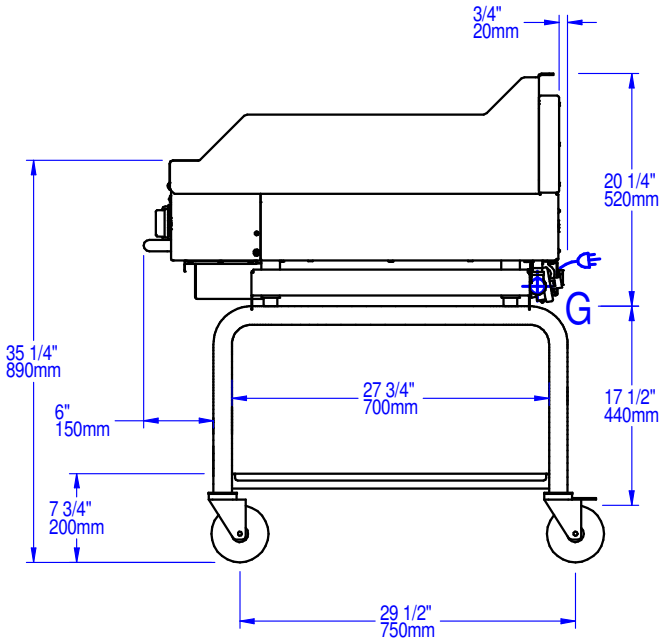

FRONT VIEW

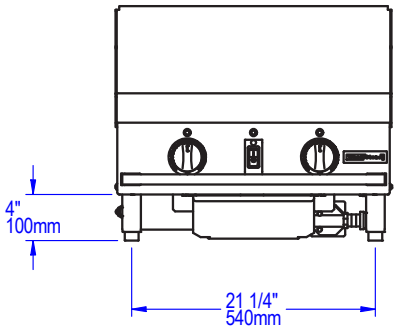

SIDE VIEW

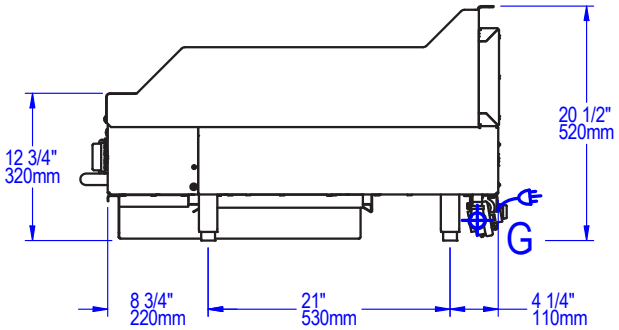

UTILITIES SPECIFICATIONS

GAS
3/4 inch gas inlet (FNPT)
60,000 BTU/hr - Natural Gas (NG)
OR
60,000 BTU/hr - Propane (LP)

Maximum gas inlet pressure:
1/2 psi (14 inches W.C.)

ELECTRICAL
120 VAC, 0.4A, 50/60 Hz, 1 Phase

Equipped with a NEMA 5-15P plug for use with a standard 120 VAC, 15 A or 20 A outlet.

Refer to data plate when installing.

VENTING INFORMATION

The Wood Stone Gas Plancha must be vented with a Listed Type 1 exhaust hood, or one constructed in accordance with NFPA 96 and all relevant local and national codes. This appliance must be vented in accordance with all relevant local and national codes, and in a manner acceptable to the authority having jurisdiction.

Unit Shipping Weight: 335 lbs / 152 kg

Intertek
ANSI Z83.11
CSA 1.8

Intertek
ANSI/NSF 4

t. 360.650.1111
tf. 800.988.8103
f. 360.650.1166

Wood Stone Corporation
1801 W. Bakerview Rd.
Bellingham, WA 98226 USA
info@woodstone-corp.com
woodstone-corp.com

REVISED: WINTER 2023

An ongoing program of product improvement may require us to change specifications without notice.

WOOD STONE

WARNING Cancer and Reproductive Harm - www.P65Warnings.ca.gov

WOOD STONE

GAS PLANCHA 36"
HIGH-TEMPERATURE GRIDDLE

Job Name	
Model	WS-GPL-3636-CT01
Item#	

A high performance alternative to a standard flat top griddle, the Wood Stone Gas Plancha brings the power and caramelization of a gas charbroiler to a direct contact cooking surface. The highly engineered Gas Plancha delivers heat when and where it is needed with three thermostatically controlled and individually adjustable zones. This allows the Wood Stone Gas Plancha to support a range of cooking temperatures simultaneously.

The 3/4-inch thick smooth steel cooking surface is heated by three 28,300 BTU/hr burners. The Gas Plancha utilizes an amazingly responsive proprietary control system developed by Wood Stone, which provides uniform, consistent temperature control across the entire cook surface. Heat-recovery is fast, even under the most demanding loads.

The surface of the Gas Plancha can be used like a griddle as a direct contact cooking surface for searing or sautéing. With a temperature range from 150° F to 650° F, it's well suited to a wide variety of culinary applications with higher temperature ranges, allowing you to achieve the color and flavor of a chargrill.

The Gas Plancha features a small footprint that measures 36 inches x 36 inches with a 36-inch x 24-inch cooking surface. Supported by four legs, it is intended for installation on a suitable countertop or on the optional stand with front locking casters, available from Wood Stone.

The Gas Plancha must be vented with a Listed Type 1 exhaust hood, or one constructed in accordance with NFPA 96 and all relevant local and national codes.

The Gas Plancha arrives completely assembled, ready to install, and is made in the USA.

Note: At this time, this product is only available in North America.

FEATURES

- Three Heat Zones
- Temperature Range of 150° F to 650° F
- Stainless Steel Backsplash
- Removable Drip Tray
- Optional Stand with Casters Available

WS-GPL-3636-CT01 with optional stand shown.

Intertek ANSI Z83.11 CSA 1.8

Intertek ANSI/NSF 4

t. 360.650.1111
tf. 800.988.8103
f. 360.650.1166

Wood Stone Corporation
1801 W. Bakerview Rd.
Bellingham, WA 98226 USA
info@woodstone-corp.com
woodstone-corp.com

REVISED: WINTER 2023

An ongoing program of product improvement may require us to change specifications without notice.

WOOD STONE

GAS PLANCHA 36"

HIGH-TEMPERATURE GRIDDLE • WS-GPL-3636-CT01

PLAN VIEW

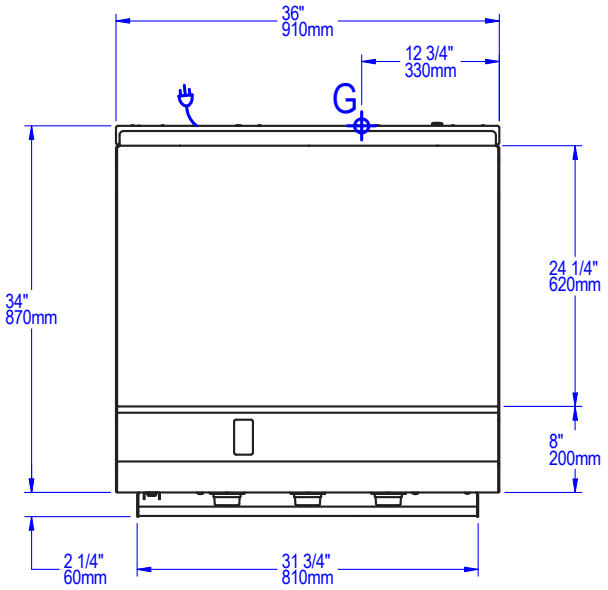

SIDE VIEW W/ OPTIONAL STAND

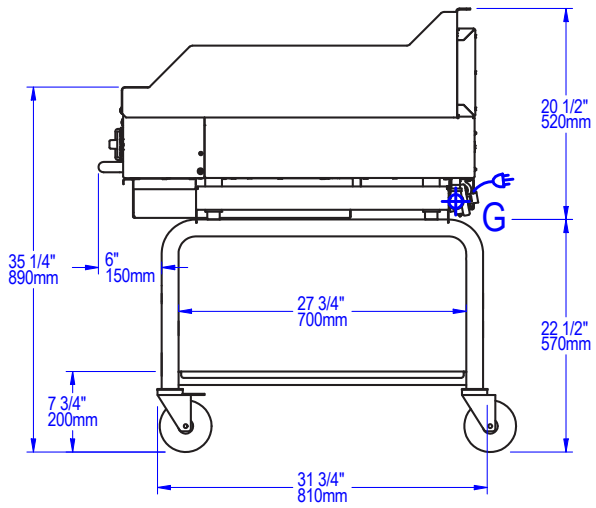

FRONT VIEW

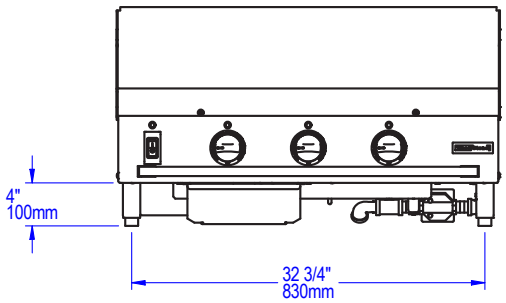

SIDE VIEW

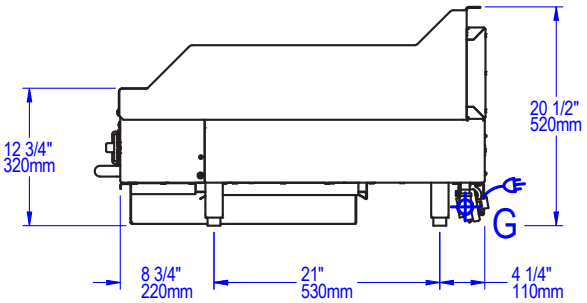

UTILITIES SPECIFICATIONS

GAS

3/4 inch gas inlet (FNPT)

85,000 BTU/hr - Natural Gas (NG)

OR

85,000 BTU/hr - Propane (LP)

Maximum gas inlet pressure:

1/2 psi (14 inches W.C.)

ELECTRICAL

120 VAC, 0.6 A, 50/60 Hz, 1 Phase

Equipped with a NEMA 5-15P plug for use with a standard 120 VAC, 15 A or 20 A outlet.

Refer to data plate when installing.

VENTING INFORMATION

The Wood Stone Gas Plancha must be vented with a Listed Type 1 exhaust hood, or one constructed in accordance with NFPA 96 and all relevant local and national codes. This appliance must be vented in accordance with all relevant local and national codes, and in a manner acceptable to the authority having jurisdiction.

Unit Ship Weight: 490 lbs / 222 kg • w/ stand: 570 lbs / 259 kg

Intertek
ANSI Z83.11
CSA 1.8

Intertek
ANSI/NSF 4

t. 360.650.1111
tf. 800.988.8103
f. 360.650.1166

Wood Stone Corporation
1801 W. Bakerview Rd.
Bellingham, WA 98226 USA
info@woodstone-corp.com
woodstone-corp.com

REVISED: WINTER 2023

An ongoing program of product improvement may require us to change specifications without notice.

WOOD STONE

WARNING Cancer and Reproductive Harm - www.P65Warnings.ca.gov

WOOD STONE

GAS PLANCHA 48"
HIGH-TEMPERATURE GRIDDLE

Job Name	
Model	WS-GPL-4836-CT01
Item#	

A high performance alternative to a standard flat top griddle, the Wood Stone Gas Plancha brings the power and caramelization of a gas charbroiler to a direct contact cooking surface. The highly engineered Gas Plancha delivers heat when and where it is needed with four thermostatically controlled and individually adjustable zones. This allows the Wood Stone Gas Plancha to support a range of cooking temperatures simultaneously.

The 3/4-inch thick smooth steel cooking surface is heated by four 27,500 BTU/hr burners (NG). The Gas Plancha utilizes an amazingly responsive proprietary control system developed by Wood Stone, which provides uniform, consistent temperature control across the entire cook surface. Even under the most demanding loads, heat-recovery is instantaneous.

The surface of the Gas Plancha can be used like a griddle as a direct contact cooking surface for searing or sautéing. With a temperature range from 150° F to 650° F, it's well suited to a wide variety of culinary applications with higher temperature ranges, allowing you to achieve the color and flavor of a chargrill.

The Gas Plancha features a small footprint that measures 48 inches x 36 inches with a 48-inch x 24-inch cooking surface. Supported by four legs, it is intended for installation on a suitable countertop or on the optional stand with front locking casters, available from Wood Stone.

The Gas Plancha must be vented with a Listed Type 1 exhaust hood, or one constructed in accordance with NFPA 96 and all relevant local and national codes.

The Gas Plancha arrives completely assembled, ready to install, and is made in the USA.

Note: At this time, this product is only available in North America.

FEATURES

- Four Heat Zones
- Temperature Range of 150° F to 650° F
- Stainless Steel Backsplash
- Removable Drip Trays
- Optional Stand with Casters Available

WS-GPL-4836-CT01 with optional stand shown.

Intertek ANSI Z83.11 CSA 1.8

Intertek ANSI/NSF 4

t. 360.650.1111
tf. 800.988.8103
f. 360.650.1166

Wood Stone Corporation
1801 W. Bakerview Rd.
Bellingham, WA 98226 USA
info@woodstone-corp.com
woodstone-corp.com

REVISED: WINTER 2023

An ongoing program of product improvement may require us to change specifications without notice.

WOOD STONE

WARNING Cancer and Reproductive Harm - www.P65Warnings.ca.gov

GAS PLANCHA 48"

HIGH-TEMPERATURE GRIDDLE • WS-GPL-4836-CT01

PLAN VIEW

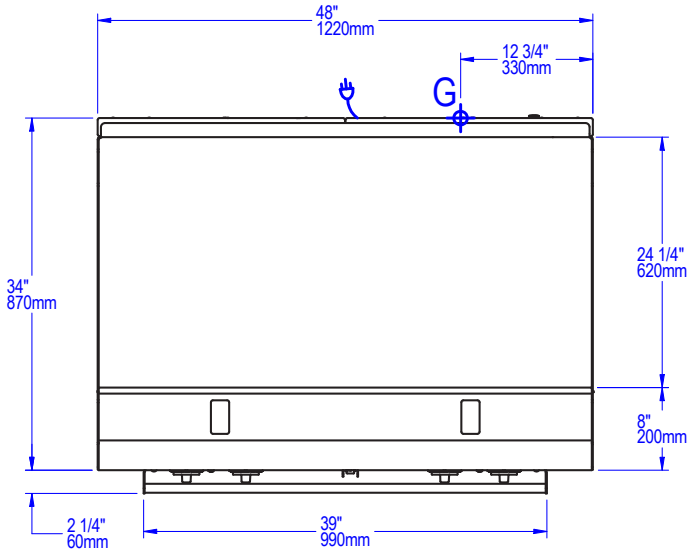

SIDE VIEW W/ OPTIONAL STAND

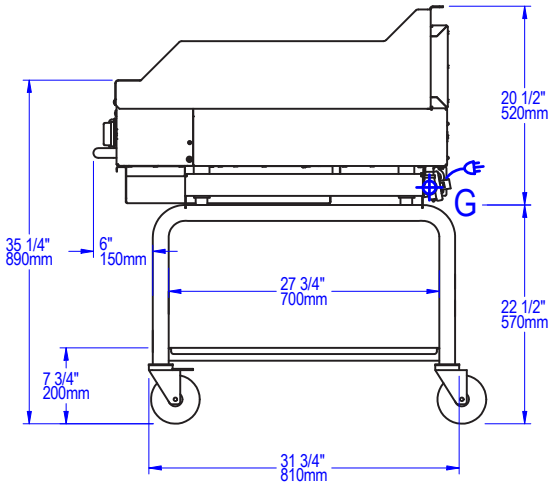

FRONT VIEW

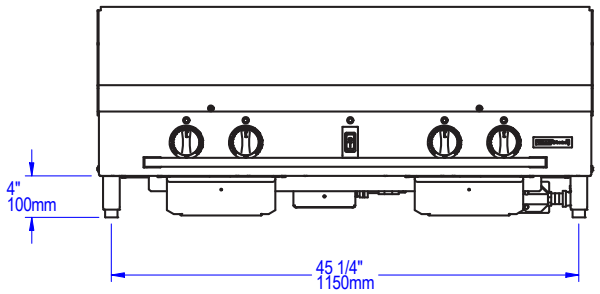

SIDE VIEW

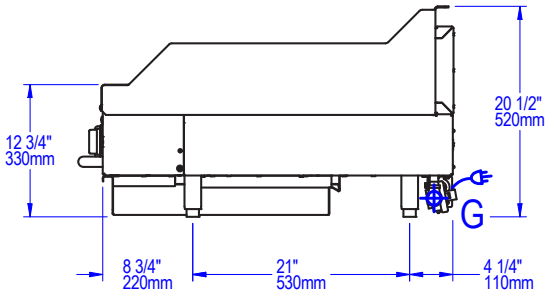

UTILITIES SPECIFICATIONS

GAS
3/4 inch gas inlet (FNPT)
110,000 BTU/hr - Natural Gas (NG)
OR
118,000 BTU/hr - Propane (LP)

Maximum gas inlet pressure:
1/2 psi (14 inches W.C.)

ELECTRICAL
120 VAC, 0.7A, 50/60 Hz, 1 Phase

Equipped with a NEMA 5-15P plug for use with a standard 120 VAC, 15 A or 20 A outlet.

Refer to data plate when installing.

VENTING INFORMATION

The Wood Stone Gas Plancha must be vented with a Listed Type 1 exhaust hood, or one constructed in accordance with NFPA 96 and all relevant local and national codes. This appliance must be vented in accordance with all relevant local and national codes, and in a manner acceptable to the authority having jurisdiction.

Unit Ship Weight: 580 lbs / 263 kg • w/ stand: 660 lbs / 300 kg

Intertek
ANSI Z83.11
CSA 1.8

Intertek
ANSI/NSF 4

t. 360.650.1111
tf. 800.988.8103
f. 360.650.1166

Wood Stone Corporation
1801 W. Bakerview Rd.
Bellingham, WA 98226 USA
info@woodstone-corp.com
woodstone-corp.com

REVISED: WINTER 2023

An ongoing program of product improvement may require us to change specifications without notice.

WOOD STONE

 WARNING Cancer and Reproductive Harm - www.P65Warnings.ca.gov

WOOD STONE

GAS PLANCHA 60"
HIGH-TEMPERATURE COOK SURFACE

Job Name	
Model	WS-GPL-6036-CT01
Item#	

WS-GPL-6036-CT01

A high performance alternative to a standard flat top griddle, the Wood Stone Gas Plancha brings the power and caramelization of a gas charbroiler to a direct contact cooking surface. The highly engineered Gas Plancha delivers heat when and where it is needed with five thermostatically controlled and individually adjustable zones. This allows the Wood Stone Gas Plancha to support a range of cooking temperatures simultaneously. An optional welded divider is available to separate either the outer left or outer right zone for specialty items.

The 3/4-inch thick smooth steel cooking surface is heated by five 30,000 BTU/hr burners (NG). LP models are also available. The Gas Plancha utilizes an amazingly responsive proprietary control system developed by Wood Stone, which provides uniform, consistent temperature control across the entire cook surface. Even under the most demanding loads, heat-recovery is instantaneous.

The surface of the Gas Plancha can be used like a griddle as a direct contact cooking surface for searing or sautéing. With a temperature range from 150° F to 650° F (65° C to 340° C), it's well suited to a wide variety of culinary applications with higher temperature ranges, allowing you to achieve the color and flavor of a chargrill.

The Gas Plancha features a compact footprint that measures 60 inches x 36 inches with a 60-inch x 24-inch cooking surface. Supported by four legs, it is intended for installation on a suitable countertop or on the optional stand with front locking casters, available from Wood Stone.

The Gas Plancha must be vented with a Listed Type 1 exhaust hood, or one constructed in accordance with NFPA 96 and all relevant local and national codes.

The Gas Plancha arrives completely assembled, ready to install, and is made in the USA.

Note: At this time, this product is only available in North America.

FEATURES

- Five Heat Zones
- Temperature Range of 150° F to 650° F (65° C to 340° C).
- Stainless Steel Backsplash
- Removable Drip Trays
- Optional Stand with Casters Available

WS-GPL-6036-CT01 shown with optional stand.

Intertek
ANSI Z83.11:2016 Ed.4
CSA 1.8:2016 Ed.4

Intertek
ANSI/NSF 4:2016

t. 360.650.1111
tf. 800.988.8103
f. 360.650.1166

Wood Stone Corporation
1801 W. Bakerview Rd.
Bellingham, WA 98226 USA
info@woodstone-corp.com
woodstone-corp.com

REVISED: WINTER 2023

An ongoing program of product improvement may require us to change specifications without notice.

WOOD STONE

WARNING Cancer and Reproductive Harm - www.P65Warnings.ca.gov

GAS PLANCHA 60"

HIGH-TEMPERATURE GRIDDLE • WS-GPL-6036-CT00

PLAN VIEW

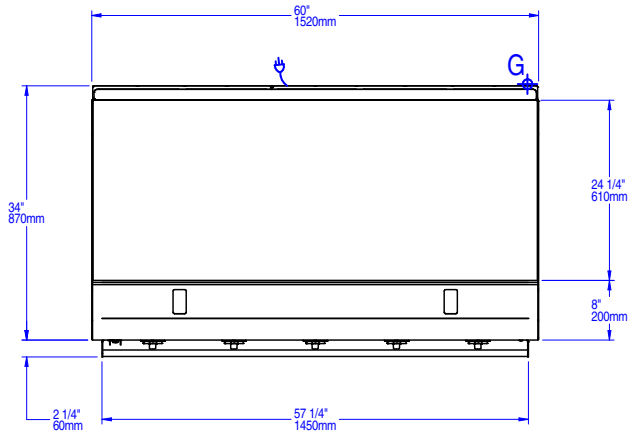

SHOWN WITH OPTIONAL STAND

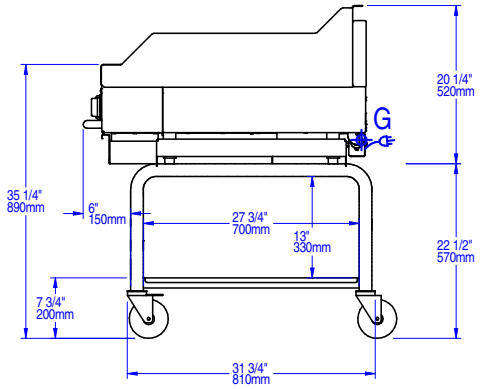

FRONT VIEW

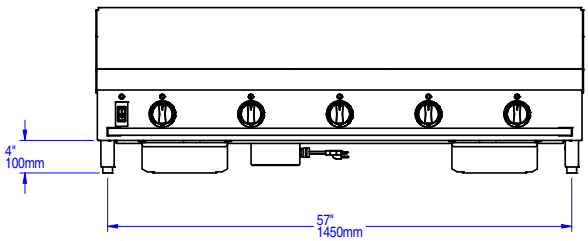

SIDE VIEW

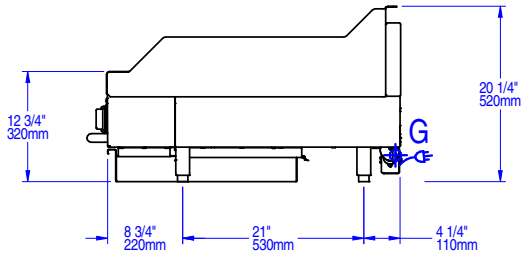

UTILITIES SPECIFICATIONS

GAS
3/4 inch gas inlet (FNPT)
150,000 BTU/hr - Natural Gas (NG)
OR
150,000 BTU/hr - Propane (LP)
Maximum Gas Inlet Pressure
1/2 psi (14 inches W.C.)

ELECTRICAL
120 VAC, 0.7A, 50/60 Hz, 1 Phase

Equipped with a NEMA 5-15P plug for use with a standard 120 VAC, 15 A or 20 A outlet.

Refer to data plate when installing.

VENTING INFORMATION

The Wood Stone Gas Plancha must be vented with a Listed Type 1 exhaust hood, or one constructed in accordance with NFPA 96 and all relevant local and national codes. This appliance must be vented in accordance with all relevant local and national codes, and in a manner acceptable to the authority having jurisdiction.

Ship Weight: 735 lbs / 333kg • w/stand 835 lbs / 379 kg

Intertek
ANSI Z83.11:2016 Ed.4
CSA 1.8:2016 Ed.4

Intertek
ANSI/NSF 4

t. 360.650.1111
tf. 800.988.8103
f. 360.650.1166

Wood Stone Corporation
1801 W. Bakerview Rd.
Bellingham, WA 98226 USA
info@woodstone-corp.com
woodstone-corp.com

REVISED: WINTER 2023

An ongoing program of product improvement may require us to change specifications without notice.

WOOD STONE

WARNING Cancer and Reproductive Harm - www.P65Warnings.ca.gov

WOOD STONE

ELECTRIC PLANCHA
HIGH-TEMPERATURE COOK SURFACE

Job Name	
Model	WS-PL-MTL-40-35-4-CT
Item#	

WS-PL-MTL-40-35-4-CT model shown.

The Wood Stone Electric Plancha features a small footprint that measures 40 inches x 35 inches with a smooth steel cooking surface 35 inches x 24 inches. Supported by four legs, it is intended for installation on a suitable countertop.

The surface of the Electric Plancha can be used as a direct contact cooking surface like a griddle for searing or sautéing, or heated up to 700 °F so that it functions more like an open burner.

This is an efficient piece of equipment that radiates less heat than a gas-fired open burner range, resulting in a cooler kitchen. With four thermostatically controlled zones, the Electric Plancha utilizes a proprietary control system developed by Wood Stone, which provides even temperature control across the entire cook surface. Its unique design ensures fast temperature recovery even in the most demanding of production environments.

The Electric Plancha arrives completely assembled, ETL Listed, ready to install and is made in the USA.

Additional product information can be found online at: woodstone-corp.com.

FEATURES

- Four Independently-Controlled Zones
- Temperature Range of 200 °F to 700 °F
- Stainless Steel Backsplash
- Removable Drip Tray

Intertek ANSI/UL 197 C22.2

Intertek ANSI/NSF 4

t. 360.650.1111
tf. 800.988.8103
f. 360.650.1166

Wood Stone Corporation
1801 W. Bakerview Rd.
Bellingham, WA 98226 USA
info@woodstone-corp.com
woodstone-corp.com

REVISED: WINTER 2023

An ongoing program of product improvement may require us to change specifications without notice.

WOOD STONE

WARNING Cancer and Reproductive Harm - www.P65Warnings.ca.gov

ELECTRIC PLANCHA

HIGH-TEMPERATURE COOK SURFACE • WS-PL-MTL-40-35-4-CT

208 VAC, 3 Phase 18.2 kW
Requires 1 ea. 50 A individual branch circuit. Single NEMA 15-50P plug.

PLAN VIEW

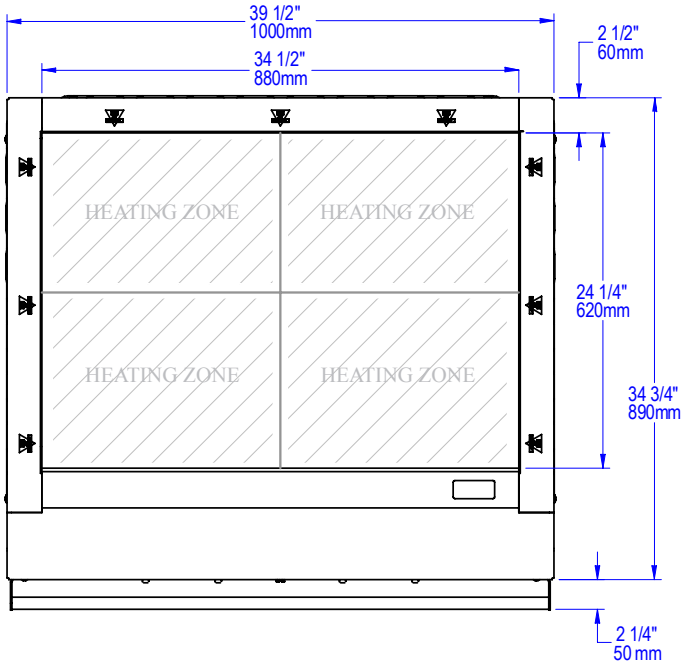

CLEARANCE INFO:

Provide a minimum of 12 inches of clearance to combustible construction from sides and back.

Allow a minimum of 3 inches of clearance around the unit to allow cooling air to enter the vents on the sides and back of the unit. Do not block the air vents on the sides, back or beneath the appliance.

FRONT VIEW

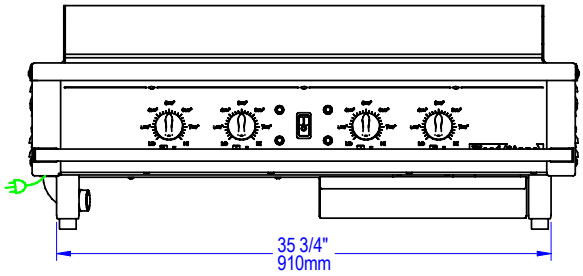

SIDE VIEW

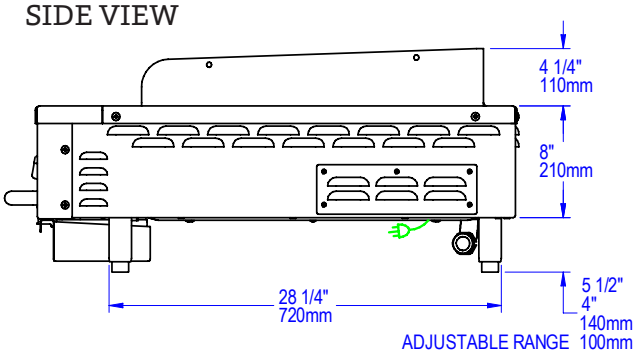

UTILITIES SPECIFICATIONS		VENTING INFORMATION
GAS N/A	ELECTRICAL Units are cord-connected. 208 VAC 3 Phase, 18.2 kW. 50A individual branch circuit. NEMA 15-50P Plug provided	The Wood Stone Electric Plancha must be vented in accordance with NFPA 96 and all relevant local and national codes, and in a manner acceptable to the authority having jurisdiction.

Ship Weight: 525 lbs / 238 kg

Intertek ANSI/UL 197 C22.2

Intertek ANSI/NSF 4

t. 360.650.1111
tf. 800.988.8103
f. 360.650.1166

Wood Stone Corporation
1801 W. Bakerview Rd.
Bellingham, WA 98226 USA
info@woodstone-corp.com
woodstone-corp.com

REVISED: WINTER 2023

An ongoing program of product improvement may require us to change specifications without notice.

WOOD STONE

WARNING Cancer and Reproductive Harm - www.P65Warnings.ca.gov

WOOD STONE

WHATCOM
GAS VERTICAL ROTISSERIE

Job Name	
Model	WS-GVR-(6, 10)
Item#	

WS-GVR model shown.

FEATURES

- Unique Vertical Roasting
- No Cross-Contamination
- Cooks up to 25 lbs. per Spit
- Medium–High Production in Small Footprint
- Models Available: 6 or 10 Spit (specify at time of order)
- Countertop Model Available
- Custom Accessories
- Beautiful Live Flame
- Optional Rear Door Available

Optional Rear Door (rear view) shown.

Optional Closed Cabinet & Rear Door (rear view) shown.

The unique design of the Whatcom Gas Vertical Rotisserie (GVR) allows different foods to be cooked at the same time, in the same rotisserie, without exchanging flavors (cross-contamination). The GVR-6 is the standard for customers cooking a wide variety of large proteins (poultry, roasts, ribs, etc.), while the GVR-10 is best suited for smaller items on skewers.

The rotisserie comes standard with a tempered glass front door, allowing the cooking process to be fully visible to chefs and customers alike. Although the front-loading model is standard, the GVR is available with an optional rear access glass door so that it can be loaded from either side. A water bath and drain facilitate simple and safe cleaning by connecting to a water line and drain line provided with a grease trap.

The cabinet of the GVR is constructed of polished stainless steel. The standard unit is on legs equipped with heavy-duty, non-marking locking casters to easily roll into an existing cook line under a Listed Type 1 exhaust hood. The GVR is also available in a countertop configuration.

The GVR is powered by three gas burners: two infrared (IR) burners (in the front corners of the cabinet and the primary heat source), and a post of live flame, located in the center of the unit. The IR burners operate on an adjustable cycle timer (10 minute cycles) or can be turned off completely so that the rotisserie is warmed by the center flame post alone. The drum of the rotisserie turns at a speed of 1.5 revolutions per minute. Each spit connection (or station) rotates approximately 6.5 times during one revolution of the drum. A jog feature allows for safe loading and unloading.

Choose the accessory package that compliments your Menu. Chicken, Rib, and Various other Proteins, as well as Vegetable packages, are available.

The unit arrives completely assembled, ETL Listed, ready to install and is made in the USA. Information about additional tools and accessories can be found online at: woodstone-corp.com.

Intertek ANSI Z83.11 CSA 1.8

Intertek ANSI/NSF 4

t. 360.650.1111
tf. 800.988.8103
f. 360.650.1166

Wood Stone Corporation
1801 W. Bakerview Rd.
Bellingham, WA 98226 USA
info@woodstone-corp.com
woodstone-corp.com

REVISED: WINTER 2023

An ongoing program of product improvement may require us to change specifications without notice.

WOOD STONE

WARNING Cancer and Reproductive Harm - www.P65Warnings.ca.gov

WHATCOM
GAS VERTICAL ROTISSERIE • WS-GVR-(6, 10)

Note: This unit is on casters; utility hookups should be made in such a way as to allow mobility of the rotisserie for service and maintenance purposes. We recommend "quick disconnects" and flexible connections.

PLAN VIEW

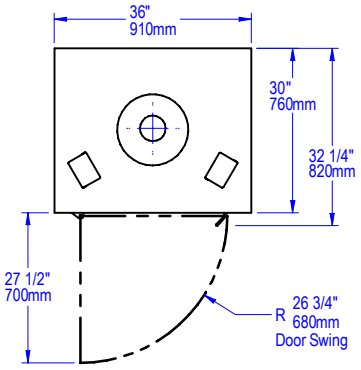

BOTTOM VIEW
w/bottom utility connections
on (optional) rear door models

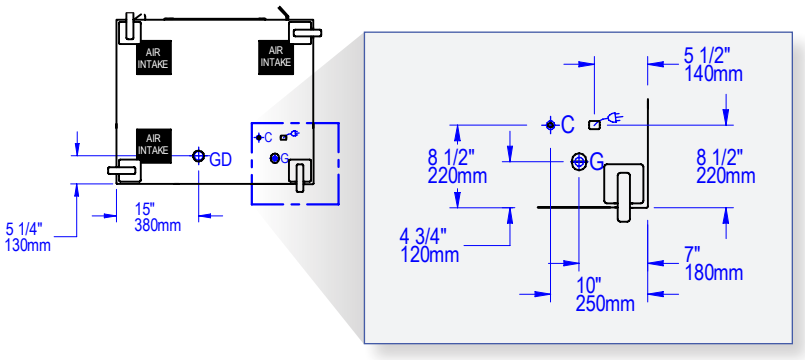

C	Water Supply ¼" NPT
G	Gas Inlet ¾ NPT
GD	Grease Drain
	Cord with NEMA 5-15 Plug
	AIR INTAKE

FRONT VIEW

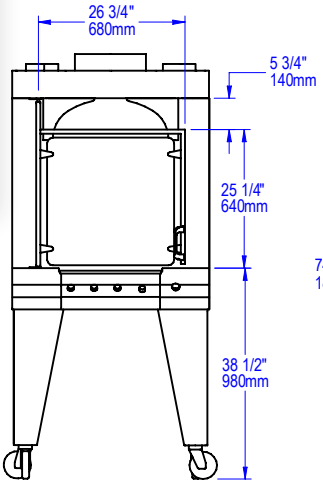

SIDE VIEW

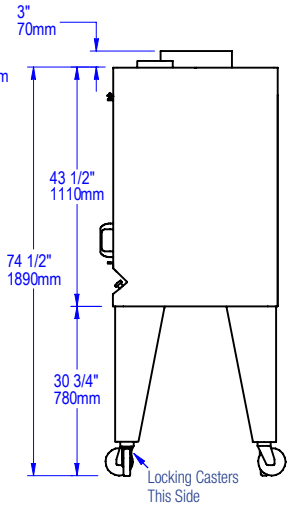

REAR VIEW
w/standard rear utility connections

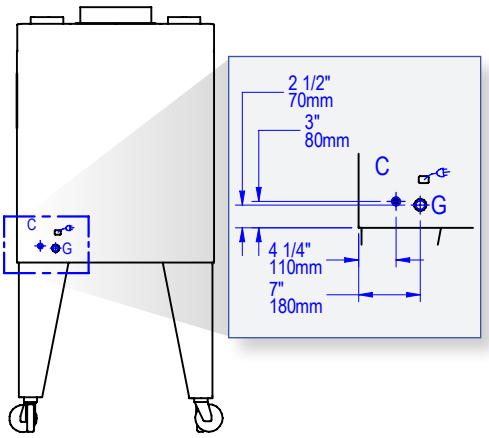

UTILITIES SPECIFICATIONS

GAS
¾ inch gas inlet (FNPT)
115,000 BTU/hr - Natural Gas (NG)
OR
115,000 BTU/hr - Propane (LP)

WATER
Provide incoming water supply equipped with a ¼" NPT fitting.

ELECTRICAL
120 VAC, 1.3 A, 50/60 Hz
NEMA 5-15 plug. Unit plugs into a standard 120 VAC, 15 A outlet.

DRAIN
Provide connection to floor sink (grease trap) equipped with a 1½" slip-fit NPT fitting.

VENTING INFORMATION

The WS-GVR-(6, 10) must be vented using a Listed Type 1 exhaust hood, or one constructed in accordance with NFPA 96 and all relevant local and national codes. The rotisserie must be vented in accordance with all relevant local and national codes, and in a manner acceptable to the authority having jurisdiction.

Ship Weight: 750 lbs / 340 kg

Intertek
ANSI Z83.11
CSA 1.8

Intertek
ANSI/NSF 4

t. 360.650.1111
tf. 800.988.8103
f. 360.650.1166

Wood Stone Corporation
1801 W. Bakerview Rd.
Bellingham, WA 98226 USA
info@woodstone-corp.com
woodstone-corp.com

REVISED: WINTER 2023

An ongoing program of product improvement may require us to change specifications without notice.

WOOD STONE

WARNING Cancer and Reproductive Harm - www.P65Warnings.ca.gov

WOOD STONE

WHATCOM
GAS VERTICAL ROTISSERIE COUNTERTOP VERSION

Job Name	
Model	WS-GVR-(6, 10)-CT
Item#	

WS-GVR-CT model shown.

The unique design of the Whatcom Gas Vertical Rotisserie (GVR) allows different foods to be cooked at the same time, in the same rotisserie, without exchanging flavors (cross-contamination). The GVR can be order with 6 or 10 spit locations (stations), allowing a large variety of products to be cooked simultaneously.

The rotisserie comes standard with a tempered glass front door, allowing the cooking process to be fully visible to chefs and customers alike. The cabinet of the GVR is constructed of polished stainless steel and is front-loading only. A water bath and drain facilitate simple and safe cleaning by connecting to a water line and drain line provided with a grease trap. The 4" curb wall is removeable for cleaning.

The GVR is also available in its standard configuration on legs, equipped with heavy-duty, non-marking locking casters to easily roll into an existing cook line under a Listed Type 1 exhaust hood.

The GVR is powered by three gas burners: two infrared (IR) burners (in the front corners of the cabinet and the primary heat source), and a post of live flame, located in the center of the unit. The IR burners operate on an adjustable cycle timer (10 minute cycles) or can be turned off completely so that the rotisserie is heated by the center flame post alone. The drum of the rotisserie turns at a speed of 1.5 revolutions per minute. Each spit connection (or station) rotates approximately 6.5 times during one revolution of the drum. A jog feature allows for safe loading and unloading.

Choose the accessory package that compliments your Menu. Chicken, Rib, and Various other Proteins, as well as Vegetable packages, are available.

The unit arrives completely assembled, ETL Listed, ready to install and is made in the USA. Information about additional tools and accessories can be found online at: woodstone-corp.com.

FEATURES

- Unique Vertical Roasting
- No Cross-Contamination
- Cooks up to 25 lbs. per Spit
- Medium–High Production in Small Footprint
- Models Available: 6 or 10 Spit (specify at time of order)
- Standing Model Available
- Custom Accessories
- Beautiful Live Flame
- Optional Rear Door Available

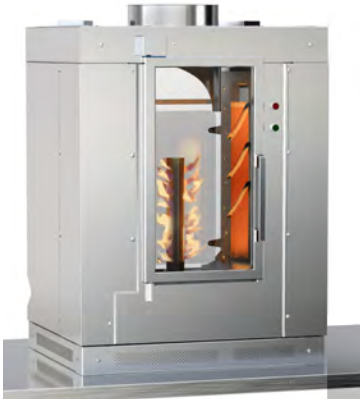

Optional Rear Door (rear view) model shown.

Intertek ANSI Z83.11 CSA 1.8

Intertek ANSI/NSF 4

t. 360.650.1111
tf. 800.988.8103
f. 360.650.1166

Wood Stone Corporation
1801 W. Bakerview Rd.
Bellingham, WA 98226 USA
info@woodstone-corp.com
woodstone-corp.com

REVISED: WINTER 2023

An ongoing program of product improvement may require us to change specifications without notice.

WOOD STONE

WHATCOM

GAS VERTICAL ROTISSERIE • COUNTERTOP VERSION • WS-GVR-(6, 10)-CT

Note: We recommend "quick disconnects" and flexible connections.

PLAN VIEW

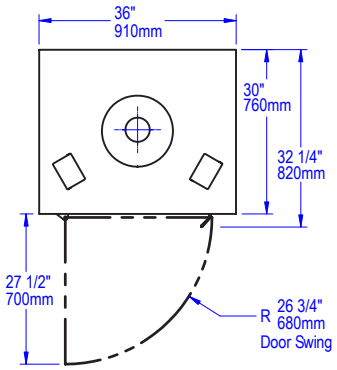

BOTTOM VIEW

w/bottom utility connections
on (optional) rear door models

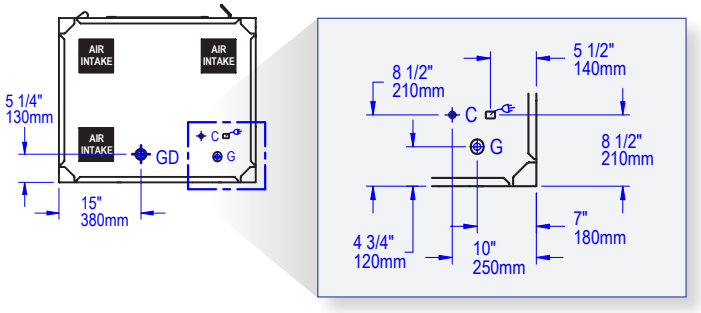

C	Water Supply ¼" NPT
G	Gas Inlet ¾ NPT
GD	Grease Drain
	Cord with NEMA 5-15 Plug
	AIR INTAKE

FRONT VIEW

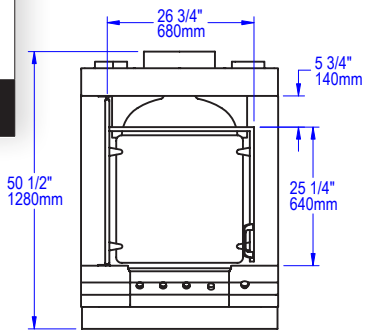

SIDE VIEW

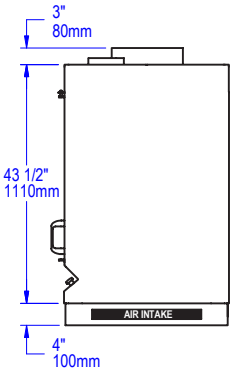

REAR VIEW

w/standard rear utility connections

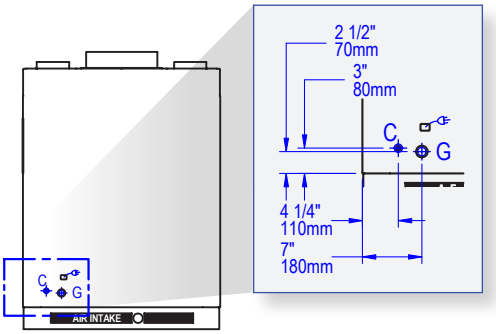

UTILITIES SPECIFICATIONS

GAS
¾ inch gas inlet (FNPT)
115,000 BTU/hr - Natural Gas (NG)
OR
115,000 BTU/hr - Propane (LP)

WATER
Provide incoming water supply equipped with a ¼" NPT fitting.

ELECTRICAL
120 VAC, 1.3 A, 60 Hz
NEMA 5-15 plug. Unit plugs into a standard 120 VAC, 15 A outlet.

DRAIN
Provide connection to floor sink (grease trap) equipped with a 1½" slip-fit NPT fitting.

VENTING INFORMATION

The WS-GVR-(6, 10)-CT must be vented using a Listed Type 1 exhaust hood, or one constructed in accordance with NFPA 96 and all relevant local and national codes. The rotisserie must be vented in accordance with all relevant local and national codes, and in a manner acceptable to the authority having jurisdiction.

Ship Weight: 600 lbs / 272 kg

Intertek
ANSI Z83.11
CSA 1.8

Intertek
ANSI/NSF 4

t. 360.650.1111
tf. 800.988.8103
f. 360.650.1166

Wood Stone Corporation
1801 W. Bakerview Rd.
Bellingham, WA 98226 USA
info@woodstone-corp.com
woodstone-corp.com

REVISED: WINTER 2023

An ongoing program of product improvement may require us to change specifications without notice.

WOOD STONE

WARNING Cancer and Reproductive Harm - www.P65Warnings.ca.gov

WOOD STONE

MT. OLYMPUS
SOLID FUEL ROTISSERIE

Job Name	
Model	WS-SFR-(6, 10)
Item#	

Left-Hand drive configuration with six spits shown.

The body of the Mt. Olympus Rotisserie is constructed of 16-gauge polished stainless steel. It comes with a durable, high-temperature ceramic firebox and can be ordered with an optional extended firebox Charbroiler which includes seven 6 x 24-inch cast iron grates (five grates for narrow models). The rotisserie is powered by 1/4 HP, variable speed, DC motor with soft start and stop, matched with a robust two-stage gearbox.

The 6 spit unit is standard. Each spit is 44 inches long (32 inches long for narrow models), giving the rotisserie a capacity of 36–42 chickens (18–24 for narrow models). The optional 10 spit model, with all 10 spits in place, is suitable only for chicken and has a capacity of 60–70 birds. The controller and motor can be located on either side of the unit—this must be specified at the time of order. The Mt. Olympus is easily serviced via an access panel located on the controller side of the unit. A 6.5-cubic foot stainless steel Wood Handling Cart is provided with each rotisserie for easy wood storage below. Additionally, a grease receptacle, Particle Shovel and Grate Tool are included. With the optional Charbroiler model, a T-Style Brass-Bristled Brush is also included.

The unit is ETL Listed and is made in the USA. Information about additional tools and accessories can be found online at: woodstone-corp.com.

FEATURES

- High Production
- Durable Construction
- Rear Load and Unload
- 6 or 10 Spit Options (6 Spit Shown)
- Standard or Narrow Widths Available
- Wood Broiler Option
- Custom Accessories
- Unique Flavor Profiles

GUIDE TO MODEL NUMBERS

	Solid Fuel Rotisserie	Narrow Width	Includes Charbroiler	Left-Hand Drive	Right-Hand Drive
WS-SFR-6	X			-L	-R
WS-SFR-6N	X	X		-L	-R

WS-SFR-6

WS-SFR-6N

Intertek

Intertek ANSI/NSF 4

t. 360.650.1111
tf. 800.988.8103
f. 360.650.1166

Wood Stone Corporation
1801 W. Bakerview Rd.
Bellingham, WA 98226 USA
info@woodstone-corp.com
woodstone-corp.com

REVISED: WINTER 2023

An ongoing program of product improvement may require us to change specifications without notice.

WOOD STONE

WARNING Cancer and Reproductive Harm - www.P65Warnings.ca.gov

MT. OLYMPUS
SOLID FUEL ROTISSERIE • WS-SFR-#

Note: The drive side is determined from the rear of the unit and can be installed on either side of the unit. The right-hand drive model mirrors the left-hand drive model (shown below) exactly. Drive side must be specified at the time of order.

This unit is on casters. Service access is from the side panels—both sides must be accessible for service.

***Drawings are of a 6 spit model with a left-hand drive.**

PLAN VIEW*

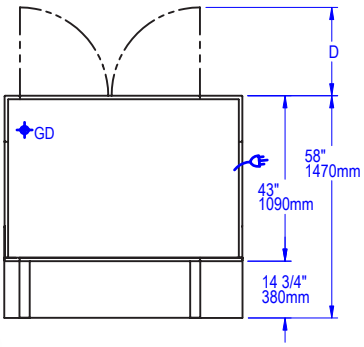

GUIDE TO MODEL NUMBERS

MODEL	Units	A	B	C	D	E	F	Ship Weight
WS-SFR-6	inches	62	47	47	23	58	14.75	2,000 lb
	mm	1575	1194	1194	584	1473	375	907 kg
WS-SFR-6N	inches	50	35	35	17	58	14.75	2,000 lb
	mm	1270	889	889	432	1473	375	907 kg

H	Control Panel
GD	Grease Drain
	Cord with NEMA 5-15 Plug

FRONT VIEW

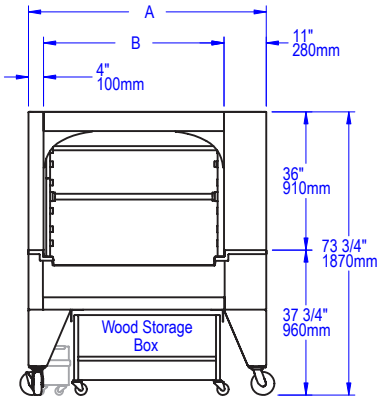

SIDE VIEW

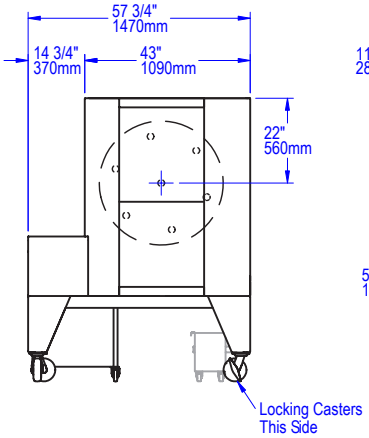

REAR VIEW (DRIVE SIDE)

Left-hand drive configuration shown.

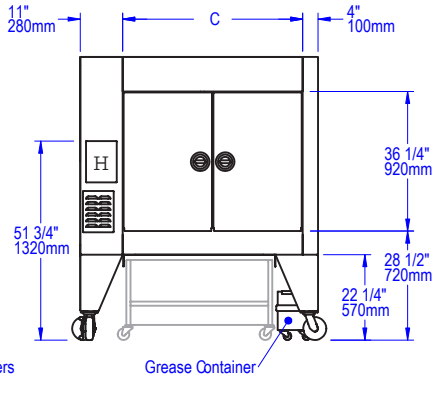

UTILITIES SPECIFICATIONS

GAS
N/A

ELECTRICAL
120 VAC, 2.5 A, 60 Hz
NEMA 5-15 plug. Unit plugs into a standard 120 VAC, 15 A outlet.

VENTING INFORMATION

The WS-SFR-# must be vented using a Listed Type 1 exhaust hood, or one constructed in accordance with NFPA 96 and all relevant local and national codes. The rotisserie must be vented as a solid fuel appliance, in accordance with all relevant local and national codes, and in a manner acceptable to the authority having jurisdiction.

Ship Weight: See table above

Intertek

Intertek
ANSI/NSF 4

t. 360.650.1111
tf. 800.988.8103
f. 360.650.1166

Wood Stone Corporation
1801 W. Bakerview Rd.
Bellingham, WA 98226 USA
info@woodstone-corp.com
woodstone-corp.com

REVISED: WINTER 2023

An ongoing program of product improvement may require us to change specifications without notice.

WOOD STONE

WARNING Cancer and Reproductive Harm - www.P65Warnings.ca.gov

WOOD STONE

MT. OLYMPUS
SOLID FUEL ROTISSERIE WITH OPTIONAL CHARBROILER

Job Name	
Model	WS-SFR-(6, 10)-BROILER
Item#	

Left-Hand drive configuration
with six spits and optional Charbroiler shown.

FEATURES

- High Production
- Durable Construction
- Rear Load and Unload
- 6 or 10 Spit Options (6 Spit Shown)
- Standard or Narrow Widths Available
- Custom Accessories
- Unique Flavor Profiles

The body of the Mt. Olympus Rotisserie is constructed of 16-gauge polished stainless steel. It comes with a durable, high-temperature ceramic firebox and when ordered with the optional extended firebox Charbroiler includes seven 6 x 24-inch cast iron grates (five grates for narrow models). The rotisserie is powered by 1/4 HP, variable speed, DC motor with soft start and stop, matched with a robust two-stage gearbox.

The 6 spit unit is standard. Each spit is 44 inches long (32 inches long for narrow models), giving the rotisserie a capacity of 36–42 chickens (18–24 for narrow models). The optional 10 spit model, with all 10 spits in place, is suitable only for chicken and has a capacity of 60–70 birds. The controller and motor can be located on either side of the unit—this must be specified at the time of order. The Mt. Olympus is easily serviced via an access panel located on the controller side of the unit. A 6.5-cubic foot stainless steel Wood Handling Cart is provided with each rotisserie for easy wood storage below. Additionally, a grease receptacle, Particle Shovel, Grate Tool and T-Style Brass-Bristled Brush is also included.

The unit is ETL Listed and is made in the USA. Information about additional tools and accessories can be found online at: woodstone-corp.com.

GUIDE TO MODEL NUMBERS

	Solid Fuel Rotisserie	Narrow Width	Includes Charbroiler	Left-Hand Drive	Right-Hand Drive
WS-SFR-6-BROILER	X		X	-L	-R
WS-SFR-6N-BROILER	X	X	X	-L	-R

WS-SFR-6-BROILER

WS-SFR-6N-BROILER

Intertek

Intertek
ANSI/NSF 4

t. 360.650.1111
tf. 800.988.8103
f. 360.650.1166

Wood Stone Corporation
1801 W. Bakerview Rd.
Bellingham, WA 98226 USA
info@woodstone-corp.com
woodstone-corp.com

REVISED: WINTER 2023

An ongoing program of product improvement may require us to change specifications without notice.

WOOD STONE

WARNING Cancer and Reproductive Harm - www.P65Warnings.ca.gov

MT. OLYMPUS

SOLID FUEL ROTISSERIE WITH OPTIONAL CHARBROILER • WS-SFR-#-BROILER

Note: The drive side is determined from the rear of the unit and can be installed on either side of the unit. The right-hand drive model mirrors the left-hand drive model (shown below) exactly. Drive side must be specified at the time of order.

This unit is on casters. Service access is from the side panels—both sides must be accessible for service.

***Drawings are of a 6 spit model with a left-hand drive.**

PLAN VIEW*

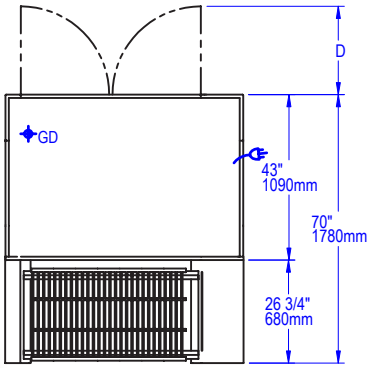

H	Control Panel
GD	Grease Drain
	Cord with NEMA 5-15 Plug

GUIDE TO MODEL NUMBERS

MODEL	Units	A	B	C	D	E	F	Ship Weight
WS-SFR-6-BROILER	inches	62	47	47	23	69.75	26.75	2,900 lb
	mm	1575	1194	1194	584	1772	679	1,315 kg
WS-SFR-6N-BROILER	inches	50	35	35	17	69.75	26.75	2,900 lb
	mm	1270	889	889	432	1772	679	1,315 kg

FRONT VIEW

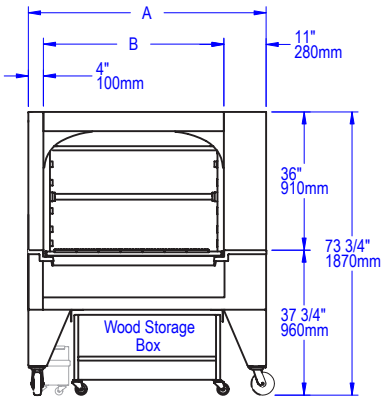

SIDE VIEW

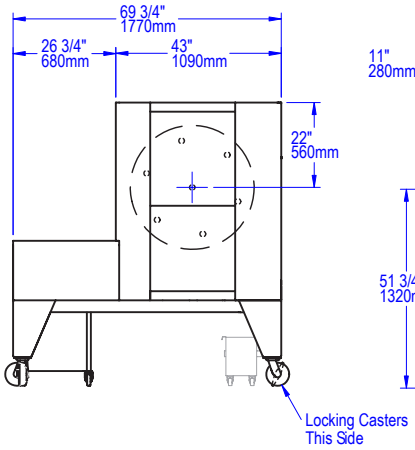

REAR VIEW (DRIVE SIDE)

Left-hand drive configuration shown.

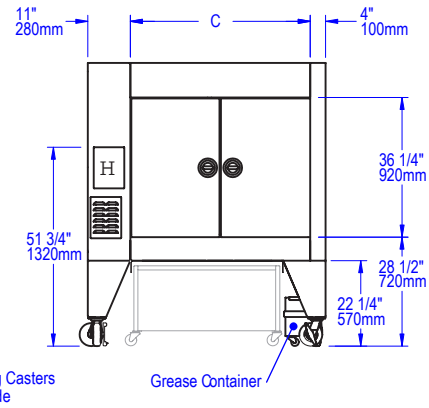

UTILITIES SPECIFICATIONS

GAS
N/A

ELECTRICAL
120 VAC, 2.5 A, 60 Hz
NEMA 5-15 plug. Unit plugs into a standard 120 VAC, 15 A outlet.

VENTING INFORMATION

The WS-SFR-# must be vented using a Listed Type 1 exhaust hood, or one constructed in accordance with NFPA 96 and all relevant local and national codes. The rotisserie must be vented as a solid fuel appliance, in accordance with all relevant local and national codes, and in a manner acceptable to the authority having jurisdiction.

Ship Weight: See table above

Intertek

Intertek ANSI/NSF 4

t. 360.650.1111
tf. 800.988.8103
f. 360.650.1166

Wood Stone Corporation
1801 W. Bakerview Rd.
Bellingham, WA 98226 USA
info@woodstone-corp.com
woodstone-corp.com

REVISED: WINTER 2023

An ongoing program of product improvement may require us to change specifications without notice.

WOOD STONE

WARNING Cancer and Reproductive Harm - www.P65Warnings.ca.gov

WOOD STONE

CASCADE
GAS-FIRED ROTISSERIE

Job Name	
Model	WS-GFR-(6, 10)
Item#	

Left-Hand drive configuration with six spits shown.

FEATURES

- High Production
- Durable Construction
- Front or Rear Load and Unload
- 6 or 10 Spit Options (6 Spit Shown)
- Custom Accessories
- Beautiful Live Flame

The body of the Cascade Rotisserie is constructed of 16-gauge polished stainless steel and is powered by a 1/4 hp variable speed DC motor with soft start and stop. The rotisserie drive features a rugged two-stage gearbox and comes standard with six 44-inch stainless steel angle spits, giving the rotisserie a 36–42 chicken capacity. The optional 10 spit model, with all 10 spits in place, is suitable only for chicken and has a capacity of 60–70 birds. The rotisserie is heated by two burners: a showy and powerful adjustable wall of radiant flame at the front of the cabinet and an overhead IR burner.

The Cascade features a constant drip water bath, so that grease from the cooking products is constantly being removed from the cabinet. The water bath is equipped with a removable drain plug for easy cleaning. The standard rotisserie has rear doors and a bump-bar style shutoff on the front. Front and rear controls facilitate easy loading and unloading from either location.

The controller and motor can be located on either side of the unit—this must be specified at the time of order. The Cascade is easily serviced via an access panel located on the drive side of the unit.

The unit is ETL Listed and made in the USA. Information about additional tools and accessories can be found online at: woodstone-corp.com.

Intertek ANSI Z83.11 CSA 1.8

Intertek ANSI/NSF 4

t. 360.650.1111
tf. 800.988.8103
f. 360.650.1166

Wood Stone Corporation
1801 W. Bakerview Rd.
Bellingham, WA 98226 USA
info@woodstone-corp.com
woodstone-corp.com

REVISED: WINTER 2023

An ongoing program of product improvement may require us to change specifications without notice.

WOOD STONE

WARNING Cancer and Reproductive Harm - www.P65Warnings.ca.gov

CASCADE
GAS-FIRED ROTISSERIE • WS-GFR-#

Note: The drive side is determined from the rear of the unit and can be installed on either side of the unit. The right-hand drive model mirrors the left-hand drive model (shown below) exactly. Drive side must be specified at the time of order.

This unit is on casters; utility hookups be made in such a way as to allow mobility of the rotisserie for service and maintenance purposes. We recommend "quick disconnects" and flexible connections. All utility connections are made from the underside of the appliance.

GD	1 ½" Slip Fit Grease Drain
C	¼" NPT Cold Water Supply
	Cord with NEMA 5-15 Plug
G	Gas Connection
H	Control Panel
	AIR INTAKE

PLAN VIEW

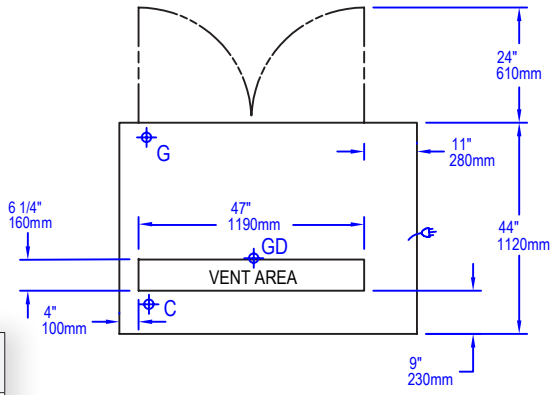

REAR VIEW (DRIVE SIDE)

Left-hand drive configuration shown.

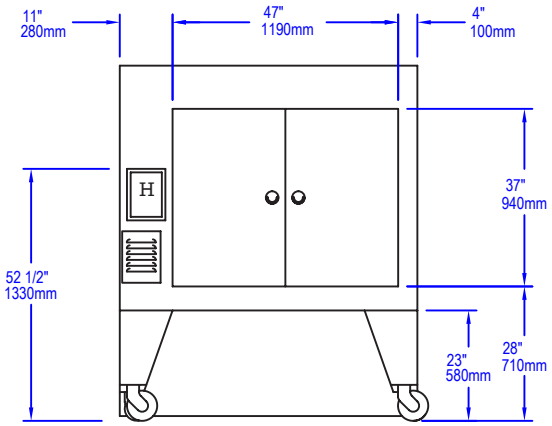

FRONT VIEW

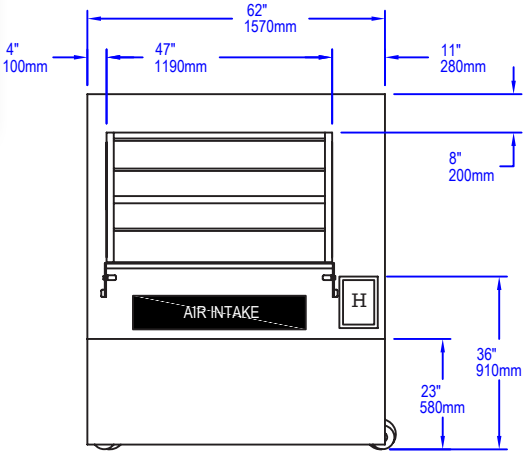

SIDE VIEW

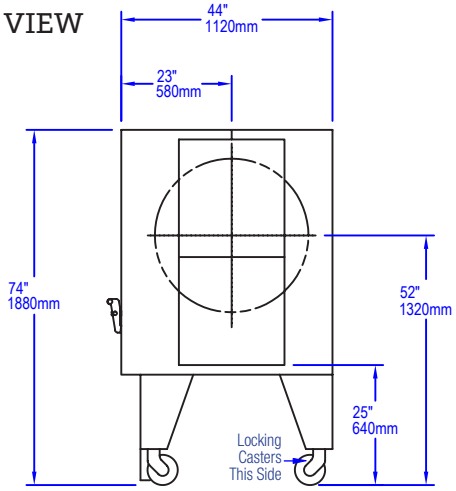

UTILITIES SPECIFICATIONS

GAS
1 inch gas inlet (FNPT)
175,000 BTU/hr - Natural Gas (NG)
OR
185,000 BTU/hr - Propane (LP)

WATER
Provide incoming water supply equipped with a ¼" NPT fitting.

ELECTRICAL
120 VAC, 5 A, 50/60 Hz
NEMA 5-15 plug. Unit plugs into a standard 120 VAC, 15 A outlet.

DRAIN
Provide connection to floor sink (grease trap) equipped with a 1 ½" slip-fit NPT fitting.

VENTING INFORMATION

The WS-GFR-# must be vented using a Listed Type 1 exhaust hood, or one constructed in accordance with NFPA 96 and all relevant local and national codes. The rotisserie must be vented in accordance with all relevant local and national codes, and in a manner acceptable to the authority having jurisdiction.

Ship Weight: 1,500 lbs / 680 kg

Intertek
ANSI Z83.11
CSA 1.8

Intertek
ANSI/NSF 4

t. 360.650.1111
tf. 800.988.8103
f. 360.650.1166

Wood Stone Corporation
1801 W. Bakerview Rd.
Bellingham, WA 98226 USA
info@woodstone-corp.com
woodstone-corp.com

REVISED: WINTER 2023

An ongoing program of product improvement may require us to change specifications without notice.

WOOD STONE

WARNING Cancer and Reproductive Harm - www.P65Warnings.ca.gov

WOOD STONE

OKANOGAN
SINGLE-SPIT ROTISSERIE

Job Name	
Model	WS-SSR-(34, 45, 57)
Item#	

Right-Hand drive Okanogan Rotisserie with optional Multi-Skewer Drum assembly. Shown on Mt. St. Helens (SFB) Charbroiler with optional Pan Rail and Shelf.

The Okanogan Single-Spit Rotisserie is an option for our Mt. St. Helens solid fuel charbroilers. The rotisserie mounts directly to the charbroiler (34", 45" and 57" Mt. St. Helens). It rides on a rail system that allows the rotisserie to be pushed to the back of the broiler for rotisserie cooking of product, or pulled to the front of the broiler, for easy loading and unloading. The Okanogan increases food production from the broiler without increasing fuel consumption; the same fire is used to generate coals for the firebox and to cook food items on the spit.

The Okanogan includes a wrap-around heat shield and single angle spit and is designed to accept all current Wood Stone horizontal rotisserie baskets and spits. The unit comes ready to plug into a standard 120 volt outlet.

Note: The Okanogan is about 9 inches wider than the Mt. St. Helens Charbroiler upon which it is set. Total height of the unit on the 34", 45" or 57" Mt. St. Helens Charbroiler is 66". The Okanogan Rotisserie will not work in combination with any other piece of equipment.

The unit is ETL Listed and made in the USA. Information about additional tools and accessories can be found online at: woodstone-corp.com.

Intertek ANSI/UL 197 C22.2

Intertek ANSI/NSF 4

t. 360.650.1111
tf. 800.988.8103
f. 360.650.1166

Wood Stone Corporation
1801 W. Bakerview Rd.
Bellingham, WA 98226 USA
info@woodstone-corp.com
woodstone-corp.com

REVISED: WINTER 2023

An ongoing program of product improvement may require us to change specifications without notice.

WOOD STONE

OKANOGAN
SINGLE-SPIT ROTISSERIE • WS-SSR-#

Note: The rotisserie is about 9 inches wider than the charbroiler upon which it is set. Total height of unit with 34", 45" or 57" charbroiler is 66". Right-hand drive configuration shown.

GUIDE TO MODEL NUMBERS

Model #	W
WS-SSR-34	41.75" / 1060mm
WS-SSR-45	53.5" / 1359mm
WS-SSR-57	66" / 1676mm

FRONT VIEW

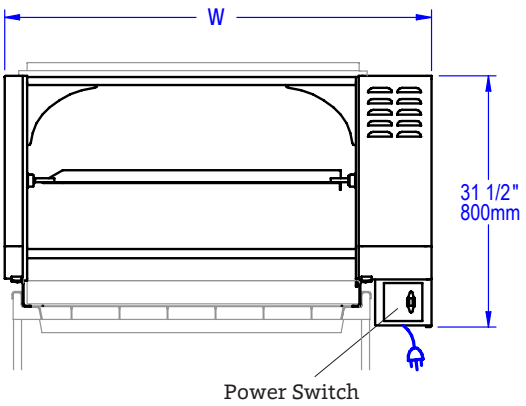

SIDE VIEW

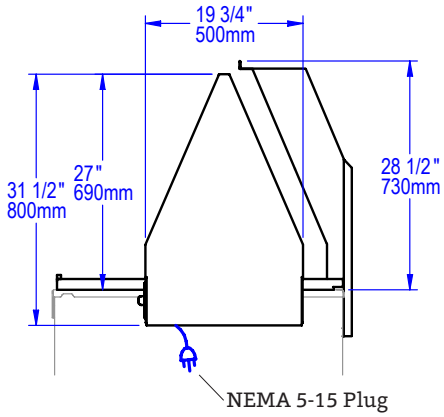

UTILITIES SPECIFICATIONS

GAS
N/A

ELECTRICAL
120 VAC, .5 A, 60 Hz
NEMA 5-15 plug. Unit plugs into a standard 120 VAC, 15 A outlet.

VENTING INFORMATION

The WS-SSR-# must be vented using a Listed Type 1 exhaust hood, or one constructed in accordance with NFPA 96 and all relevant local and national codes. The rotisserie must be vented as a solid fuel appliance in accordance with all relevant local and national codes, and in a manner acceptable to the authority having jurisdiction.

Ship Weight: 300 lbs / 136 kg

Intertek ANSI/UL 197 C22.2

Intertek ANSI/NSF 4

t. 360.650.1111
tf. 800.988.8103
f. 360.650.1166

Wood Stone Corporation
1801 W. Bakerview Rd.
Bellingham, WA 98226 USA
info@woodstone-corp.com
woodstone-corp.com

REVISED: WINTER 2023

An ongoing program of product improvement may require us to change specifications without notice.

WOOD STONE

 WARNING Cancer and Reproductive Harm - www.P65Warnings.ca.gov

WOOD STONE

MT. ST. HELENS
SOLID FUEL CHARBROILER
36 SERIES

Job Name	
Model	WS-SFB-(34, 45, 57, 72)
Item#	

Optional Shelf and Sauce Pan Rack shown.

The 36" deep Mt. St. Helens Charbroiler features a "heat-sink" style firebox cast from our dense, durable high-temperature ceramic. The firebox is designed to store and radiate heat evenly. The grill is comprised of 6" x 24" cast iron grates which rest on our unique warp-resistant, stainless steel frame system. The entire grill frame slides toward the front or back of the unit to facilitate easy fire access. A blazing fire along the rear of the firebox will produce coals, which when pulled forward, will keep the entire firebox saturated with heat. An experienced solid fuel grill operator will be impressed by the even heat delivery and fuel-saving design of the Mt. St. Helens. The insulated firebox is mounted on top of a stainless steel wood storage cabinet. A countertop version is also available. The charbroiler comes standard on four heavy-duty, swiveling casters (front two with locking brakes). A Particle Shovel, T-Style Brass-Bristled Brush and Grate Tool are included with the charbroiler.

The unit arrives completely assembled, ETL Listed, ready to install and is made in the USA. Information about tools and accessories can be found online at: woodstone-corp.com.

FEATURES

- Durable Ceramic Firebox Construction
- Reduced Fuel Consumption
- Countertop Option Available
- Solid Fuel
- Wide Range of Sizes - 34", 45", 57", 72"
- Rotisserie Available on Select Sizes
- Rear-Mount Heat Shield Available
- Optional Broiler Shelf, Skewer (Satay) Rack, Shelves and Sauce Pan Racks Available to Increase Versatility
- Optional Searing Plate Available

Optional Broiler Shelf, Skewer (Satay) Rack, Shelves and Sauce Pan Racks shown.

Intertek

Intertek ANSI/NSF 4

t. 360.650.1111
tf. 800.988.8103
f. 360.650.1166

Wood Stone Corporation
1801 W. Bakerview Rd.
Bellingham, WA 98226 USA
info@woodstone-corp.com
woodstone-corp.com

REVISED: WINTER 2023

An ongoing program of product improvement may require us to change specifications without notice.

WOOD STONE

MT. ST. HELENS

SOLID FUEL CHARBROILER • 36 SERIES • WS-SFB-#

Note: Drawings shown with optional Shelf and Sauce Pan Rack.

Shelves and Sauce Pan Racks that mount on the sides of the unit are a standard size for ALL models (20.75" x 8"). Front Shelf and Sauce Pan Rack sizes vary depending on model.

PLAN VIEW

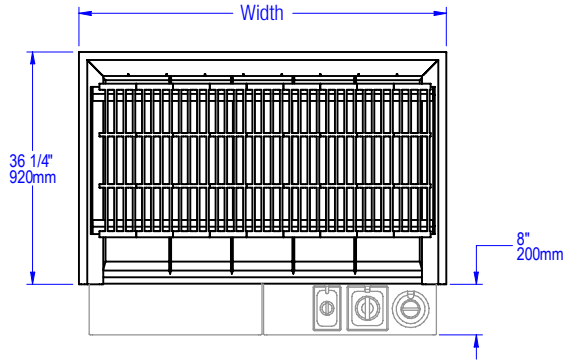

GUIDE TO MODEL NUMBERS

	Width	# of 6" x 24" Grates	# of 4" x 24" Grates	Ship Weight
WS-SFB-34	34" / 860mm	5		1,100 lbs / 500 kg
WS-SFB-45	45" / 1140mm	7		1,300 lbs / 590 kg
WS-SFB-57	57" / 1450mm	9		1,600 lbs / 726 kg
WS-SFB-72	72" / 1830mm	10	2	1,800 lbs / 816 kg
WS-SFB-34-CT	34" / 860mm	5		900 lbs / 408 kg
WS-SFB-45-CT	45" / 1140mm	7		1,150 lbs / 522 kg
WS-SFB-57-CT	57" / 1450mm	9		1,300 lbs / 590 kg
WS-SFB-72-CT	72" / 1830mm	10	2	1,300 lbs / 590 kg

FRONT VIEW • COUNTERTOP MODEL (-CT)

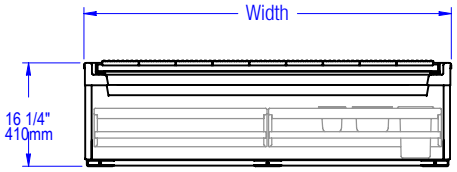

FRONT VIEW

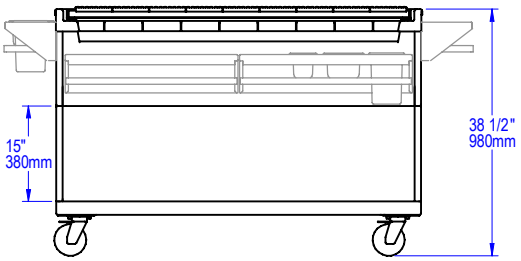

SIDE VIEW

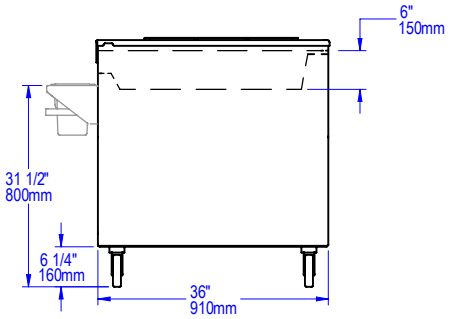

UTILITIES SPECIFICATIONS

GAS	ELECTRICAL
N/A	N/A

VENTING INFORMATION

The WS-SFB-# must be vented using a Listed Type 1 exhaust hood, or one constructed in accordance with NFPA 96 and all relevant local and national codes. The charbroiler must be vented as a solid fuel appliance, in accordance with all relevant local and national codes, and in a manner acceptable to the authority having jurisdiction.

Ship Weight: See table above

Intertek

Intertek ANSI/NSF 4

t. 360.650.1111
tf. 800.988.8103
f. 360.650.1166

Wood Stone Corporation
1801 W. Bakerview Rd.
Bellingham, WA 98226 USA
info@woodstone-corp.com
woodstone-corp.com

REVISED: WINTER 2023

An ongoing program of product improvement may require us to change specifications without notice.

WOOD STONE

WARNING Cancer and Reproductive Harm - www.P65Warnings.ca.gov

WOOD STONE

MT. ST. HELENS
SOLID FUEL CHARBROILER
26 SERIES

Job Name	
Model	WS-SFB-5426
Item#	

Optional Skewer (Satay) Rack, Shelves and Sauce Pan Racks shown.

The 26" deep Mt. St. Helens Charbroiler features a "heat-sink" style firebox cast from our dense, durable high-temperature ceramic. The firebox is designed to store and radiate heat evenly. The grill is comprised of eight 6" x 16" sliding cast iron grates which rest on our unique warp-resistant, stainless steel frame system. The entire grill frame slides toward the front or back of the unit to facilitate easy fire access. A blazing fire along the rear of the firebox will produce coals, which when pulled forward, will keep the entire firebox saturated with heat. An experienced solid fuel grill operator will be impressed by the even heat delivery and fuel-saving design of the Mt. St. Helens. The insulated firebox is mounted on top of a stainless steel wood storage cabinet. The unit comes standard on four heavy-duty, swiveling casters (front two with locking brakes). A Particle Shovel, T-Style Brass-Bristled Brush and Grate Tool are included with the charbroiler.

The unit arrives completely assembled, ETL Listed, ready to install and is made in the USA. Information about tools and accessories can be found online at: woodstone-corp.com.

FEATURES

- Durable Ceramic Firebox Construction
- Reduced Fuel Consumption
- Countertop Option Available
- Solid Fuel
- Optional Broiler Shelf and Skewer (Satay) Rack Available to Increase Versatility
- Optional Shelves and Sauce Pan Racks Available
- Optional Searing Plate Available

Optional Broiler Shelf, Skewer (Satay) Rack, Shelves and Sauce Pan Racks shown.

Intertek

Intertek ANSI/NSF 4

t. 360.650.1111
tf. 800.988.8103
f. 360.650.1166

Wood Stone Corporation
1801 W. Bakerview Rd.
Bellingham, WA 98226 USA
info@woodstone-corp.com
woodstone-corp.com

REVISED: WINTER 2023

An ongoing program of product improvement may require us to change specifications without notice.

WOOD STONE

WARNING Cancer and Reproductive Harm - www.P65Warnings.ca.gov

MT. ST. HELENS

SOLID FUEL CHARBROILER • 26 SERIES • WS-SFB-5426

Note: Drawings shown with optional Broiler Shelf, Skewer (Satay) Rack, Shelves and Sauce Pan Racks.

Shelves and Sauce Pan Racks that mount on the sides of the unit are a standard size for ALL models (20.75" x 8"). Front Shelf and Sauce Pan Racks sizes vary depending on model.

PLAN VIEW

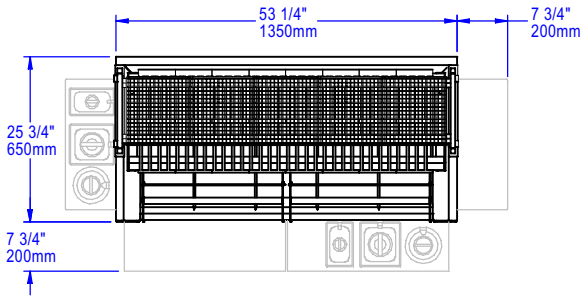

FRONT VIEW • COUNTERTOP MODEL (-CT)

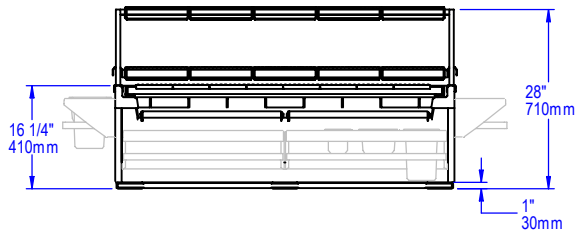

FRONT VIEW

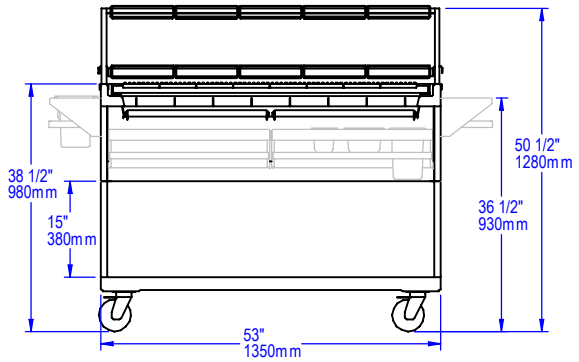

SIDE VIEW

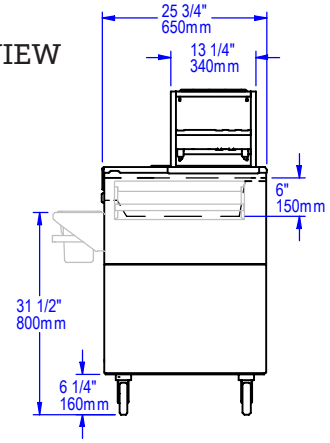

UTILITIES SPECIFICATIONS		VENTING INFORMATION
GAS	ELECTRICAL	The WS-SFB-5426 must be vented using a Listed Type 1 exhaust hood, or one constructed in accordance with NFPA 96 and all relevant local and national codes. The charbroiler must be vented as a solid fuel appliance, in accordance with all relevant local and national codes, and in a manner acceptable to the authority having jurisdiction.
N/A	N/A	

Ship Weight: 1,100 lbs / 500 kg

Intertek

Intertek ANSI/NSF 4

t. 360.650.1111
tf. 800.988.8103
f. 360.650.1166

Wood Stone Corporation
1801 W. Bakerview Rd.
Bellingham, WA 98226 USA
info@woodstone-corp.com
woodstone-corp.com

REVISED: WINTER 2023

An ongoing program of product improvement may require us to change specifications without notice.

WOOD STONE

WOOD STONE

MT. SHUKSAN
DEEP BOX
SOLID FUEL CHARBROILER

Job Name	
Model	WS-SFB-(34, 46, 58)-DB
Item#	

WS-SFB-34-DB model shown.

The Mt. Shuksan Charbroiler features a "heat sink" style firebox cast from our dense, durable high-temperature ceramic. The firebox is contained within a heavy-duty, insulated, stainless steel cabinet.

The Mt. Shuksan is designed to store and radiate heat evenly. The grill is comprised of 6" x 24" cast iron grates which rest on our unique warp-resistant, stainless steel frame system. The grates slope upward toward the back of the firebox to allow for easier grilling.

A relatively small amount of fuel (seasoned hardwood or hardwood charcoal) will keep the entire firebox saturated with heat, which is evenly radiated up to the grill surface. There are no ash dropouts or vents in the firebox, so "fuel-wasting" airflow is minimized. An experienced solid fuel grill operator will be impressed by the even heat delivery and fuel-saving design of the Mt. Shuksan. A unique lift-up door allows easy access to the firebox in order to load fuel from the front.

The unit comes standard on four heavy-duty, swiveling casters (two with locking brakes). A Particle Shovel, T-Style Brass-Bristled Brush and Grate Tool are included with the charbroiler.

The unit is available in three different sizes and arrives completely assembled, ETL Listed, ready to install and is made in the USA. Information about tools and accessories can be found online at: woodstone-corp.com.

FEATURES

- Durable Ceramic Firebox Construction
- Reduced Fuel Consumption
- Even, Consistent Heat
- Solid Fuel
- Wide Range of Sizes - 34", 46", 58"
- Accommodates Larger Wood for Easier Fire Management

Intertek

Intertek ANSI/NSF 4

t. 360.650.1111
tf. 800.988.8103
f. 360.650.1166

Wood Stone Corporation
1801 W. Bakerview Rd.
Bellingham, WA 98226 USA
info@woodstone-corp.com
woodstone-corp.com

REVISED: WINTER 2023

An ongoing program of product improvement may require us to change specifications without notice.

WOOD STONE

WARNING Cancer and Reproductive Harm - www.P65Warnings.ca.gov

MT. SHUKSAN
DEEP BOX SOLID FUEL CHARBROILER • WS-SFB-#-DB

Note: WS-SFB-58-DB model is shown in the drawings below. Both the 46" and 58" have two doors as shown, while the 34" has one door.

PLAN VIEW

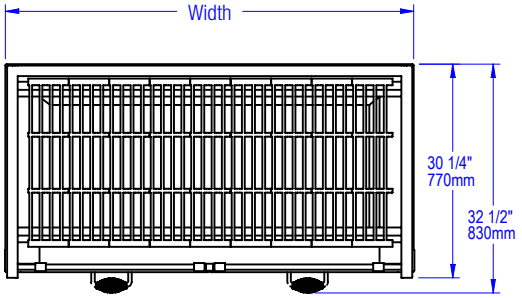

GUIDE TO MODEL NUMBERS

Model	Width	# of 6" x 24" Grates	Ship Weight
WS-SFB-34-DB	34" / 864mm	5	1,100 lbs / 500 kg
WS-SFB-46-DB	46" / 1168mm	7	1,500 lbs / 680 kg
WS-SFB-58-DB	58" / 1473mm	9	1,700 lbs / 771 kg

FRONT VIEW

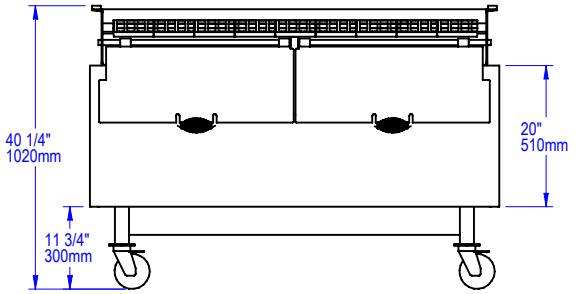

SIDE VIEW

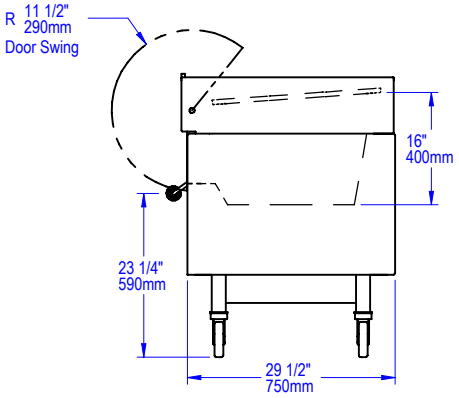

UTILITIES SPECIFICATIONS

GAS	ELECTRICAL
N/A	N/A

VENTING INFORMATION

The WS-SFB-#-DB must be vented using a Listed Type 1 exhaust hood, or one constructed in accordance with NFPA 96 and all relevant local and national codes. The charbroiler must be vented as a solid fuel appliance, in accordance with all relevant local and national codes, and in a manner acceptable to the authority having jurisdiction.

Ship Weight: See table above

Intertek

Intertek
ANSI/NSF 4

t. 360.650.1111
tf. 800.988.8103
f. 360.650.1166

Wood Stone Corporation
1801 W. Bakerview Rd.
Bellingham, WA 98226 USA
info@woodstone-corp.com
woodstone-corp.com

REVISED: WINTER 2023

An ongoing program of product improvement may require us to change specifications without notice.

WOOD STONE

 WARNING Cancer and Reproductive Harm - www.P65Warnings.ca.gov

WOOD STONE

EXHAUST FANS

WS-GSV-315 model shown.

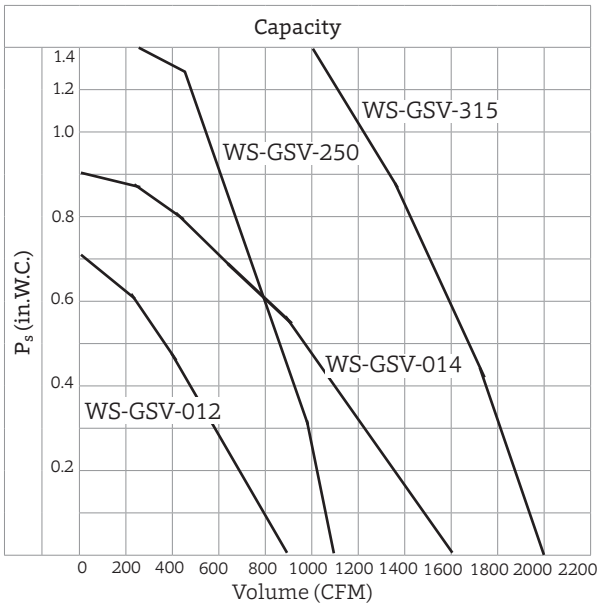

Wood Stone is proud to carry the world's finest line of oven exhaust fans for gas and solid fuel venting applications. Each is designed to withstand the high temperatures associated with stone hearth cooking and creosote production that results from solid fuel burning. Whether venting your Wood Stone oven through a hood or through a direct chimney connection, the WS-GSV is perfect for the job.

Exodraft exhaust fans are made in Denmark and distributed by Enervex. The direct-drive WS-GSV fan is rated for continuous operation at 450 °F. It installs at the end of your duct run, and comes with a mounting adapter for easy installation on to most round ducts. The fan may also be installed on a conventional roof curb.

The fan comes with a rheostat-type speed control which allows the installer or operator to easily set the proper airflow appropriate for the situation.

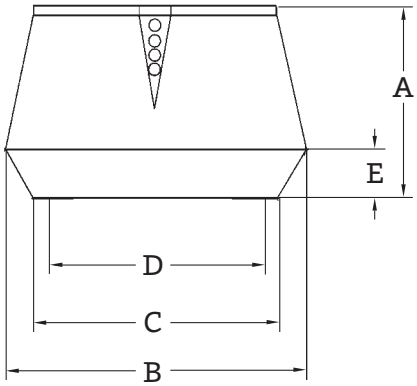

	WS-GSV-012	WS-GSV-014	WS-GSV-250	WS-GSV-315
A	11.03"	13.20"	13.20"	16.94"
B	15.37"	19.11"	19.11"	25.61"
C	12.22"	15.17"	15.17"	20.69"
D	10.72"	13.04"	9.85"	15.76"
E	3.15"	3.94"	3.94"	5.12"
Lbs	46	60	60	92
Amps	1.4	2.9	2.9	5.8
Volts	120	120	120	120

Intertek

t. 360.650.1111
tf. 800.988.8103
f. 360.650.1166

Wood Stone Corporation
1801 W. Bakerview Rd.
Bellingham, WA 98226 USA
info@woodstone-corp.com
woodstone-corp.com

REVISED: WINTER 2023

An ongoing program of product improvement may require us to change specifications without notice.

WOOD STONE

WARNING Cancer and Reproductive Harm - www.P65Warnings.ca.gov

OVEN-MOUNTED EXHAUST HOODS

WOOD STONE

The SG-BDL-O-WS is an ETL Listed (to the UL710 Standard) Type 1 Oven-Mounted Exhaust Hood manufactured by Gaylord Industries specifically for Wood Stone ovens. The eyebrow-type hood mounts directly on top of the oven. It is designed to capture all the exhaust from the oven flue collar and draw warm air away from the front of the oven. The hood comes complete with a pre-drilled mounting flange and all the hardware necessary for mounting.

Hoods are available in flat face or curved face design. Solid brass trim is available on either design. All hoods are pre-piped for ANSUL R-102 fire suppression.

The hood is constructed of 18-gauge stainless steel and is equipped with baffle-type filters for removal of grease from the exhaust stream. The Wood Stone SG-BDL-O-WS is listed by Intertek and NSF. Its construction meets the requirements of NFPA-96 as well as those of all national mechanical codes. Spark arrestor filters are available as an option and must be used in all solid fuel installations.

The hood can be used in conjunction with an Exodraft exhaust fan (see previous page) to create an effective and responsive exhaust system. All duct work beyond the ventilator duct take-off collar is to be provided and installed by others in accordance with applicable codes.

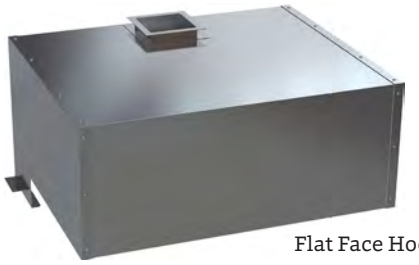

Flat Face Hood

Curved Face Hood

AVAILABLE OPTIONS

SPARK ARRESTOR FILTERS

Hood filters required for solid fuel applications.

AUTOSTART

The Gaylord Autostart System is designed to automatically start the exhaust fan if cooking starts without the exhaust fan switch being turned ON. The Autostart utilizes a hood-mounted thermostat and accompanying controller. This system is meant to be installed in conjunction with your conventional fan ON/OFF switch (by others).

BALANCING DAMPER

Manually set balancing dampers, used for balancing in multi-hood, shared duct installations.

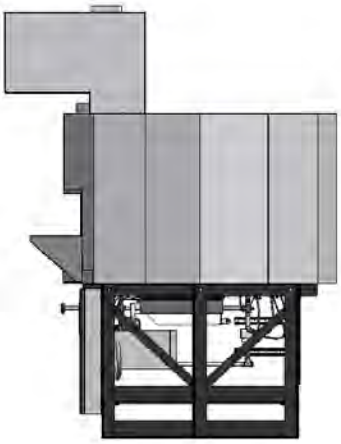

Exhaust hood mounted on a Mountain Series oven.

Intertek

t. 360.650.1111
tf. 800.988.8103
f. 360.650.1166

Wood Stone Corporation
1801 W. Bakerview Rd.
Bellingham, WA 98226 USA
info@woodstone-corp.com
woodstone-corp.com

REVISED: WINTER 2023

An ongoing program of product improvement may require us to change specifications without notice.

WOOD STONE

 WARNING Cancer and Reproductive Harm - www.P65Warnings.ca.gov

WOOD STONE

OVEN-MOUNTED EXHAUST HOODS

See below for exact dimensions and installation specifications of Gaylord Industries Exhaust Hoods for Bistro Line, Mountain Series and Fire Deck Series oven models. For details on Enervex Exhaust Fans for Wood Stone Exhaust Hoods, see page 109.

Oven Model Number

		WS-BL-3030	WS-BL-4343/ 4355/ 4836	WS-MS-4	WS-MS-5	WS-MS-6	WS-MS-7	WS-FD-6045	WS-FD-8645	WS-FD-9660/ 11260	WS-FD-9690/ 11275/ 11290
	Hood Width	29.5"	42.5"	30"	47"	47"	54"	50"	72"	72"	72"
	Hood Height	29"	29.5"	24"	24"	24"	24"	24"	25"	25"	25"
DEPTH	Flat Face	29"	33"	33"	38"	38"	38"	33"	33"	33"	33"
DEPTH	Curved Face	33"	37"	37"	42"	42"	42"	37"	37"	37"	37"
	Required CFM	440	625	450	685	685	700	730	1050	1050	1050
	Duct Size	6 x 6"	7 x 7"	6 x 6"	7.5 x 7.5"	7.5 x 7.5"	7.5 x 7.5"	7.5 x 7.5"	9 x 9"	9 x 9"	9 x 9"
	Min. Overhang	8"	8"	8"	8"	8"	8"	8"	8"	8"	8"
	Static Pressure	0.80"	0.80"	0.80"	0.80"	0.80"	0.80"	0.80"	0.80"	0.80"	0.80"
	Weight in lbs.	125	175	125	175	175	225	225	350	350	350

Intertek

t. 360.650.1111
tf. 800.988.8103
f. 360.650.1166

Wood Stone Corporation
1801 W. Bakerview Rd.
Bellingham, WA 98226 USA
info@woodstone-corp.com
woodstone-corp.com

REVISED: WINTER 2023

An ongoing program of product improvement may require us to change specifications without notice.

WOOD STONE

WARNING Cancer and Reproductive Harm - www.P65Warnings.ca.gov

OVEN ARCHES

WOOD STONE

OVEN ARCHES

How you plan to use your Wood Stone oven will determine which arch style is right for you. Shown here are the standard and two optional styles available (on select models). The three arch styles are shown installed on a Mountain Series oven.

Standard Arch shown.

STANDARD ARCH

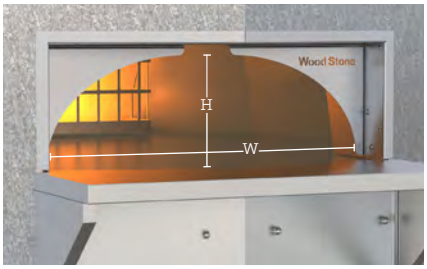

Standard Arch

By far our most popular arch because of its versatility, blending the best flame visibility, chef accessibility and menu adaptability.

- Best Visibility
- Best Accessibility
- Small to Large Pizzas

SPECIALTY ARCHES

Our specialty arches have been designed to balance visibility, accessibility and heat characteristics to meet your specific requirements.

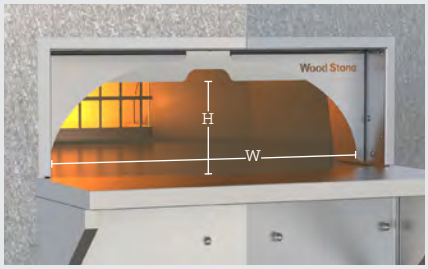

Low Arch Wide

Offers a higher temperature cooking chamber, while still offering good visibility and accessibility.

- Higher Temperatures
- Small to Large Pizzas
- Reduced Visibility
- Reduced Vertical Accessibility
- Available on Mountain Series, Traditional Series and Fire Deck Series Ovens

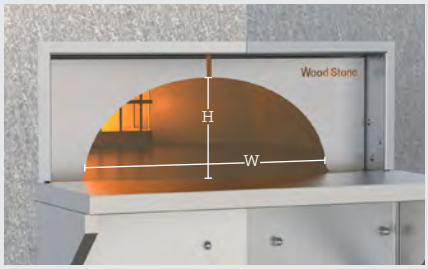

Low Arch Narrow

For customers that are willing to trade visibility and accessibility in pursuit of the Naples experience.

- Great for "Naples" Pizza
- Highest Temperatures
- Small to Medium Pizzas
- Lowest Visibility
- Lowest Accessibility
- Available on Mountain Series and Traditional Series Ovens

t. 360.650.1111
tf. 800.988.8103
f. 360.650.1166

Wood Stone Corporation
1801 W. Bakerview Rd.
Bellingham, WA 98226 USA
info@woodstone-corp.com
woodstone-corp.com

REVISED: WINTER 2023

An ongoing program of product improvement may require us to change specifications without notice.

WOOD STONE

 WARNING Cancer and Reproductive Harm - www.P65Warnings.ca.gov

WOOD STONE

OVEN ARCHES

Specialty Arch, Low Arch Wide shown.

ARCH STYLES AND DIMENSIONS

The table below lists doorway opening dimensions and opening dimensions with the installation of Standard, Low Arch Wide and Low Arch Narrow arches for Mountain Series, Traditional Series and Fire Deck Series ovens. **Note:** Select arch styles are not available for all oven models.

	Doorway Opening		Standard Arch		Low Arch Wide		Low Arch Narrow	
Mountain Series	H	W	H	W	H	W	H	W
Mt. Adams 5'	10"	29.75"	8.75"	28"	7.25"	28	8"	22.25"
Mt. Baker 6'	10"	36"	9"	33.75"	7.25"	33.75"	8.25"	28"
Mt. Rainier 7'	12"	42"	10.75"	42"	9"	39.5"	10"	34"
Fire Deck Series								
WS-FD-6045	9.75"	34"	9"	32"	7.5"	32"	n/a	
WS-FD-8645	10"	56"	9"	54"	7.5"	54"		
WS-FD-9660, 11260	10"	54"	9.5"	53"	7.5"	53"		
WS-FD-9690, 11275, 11290	10"	60"	9.5"	59.5"	7.5"	59.75"		
Traditional Series								
WS-TS-5	10"	29.75"	9"	28"	7.25"	28	8"	22.25"
WS-TS-6	10"	36"	9"	33.75"	7.25"	33.75"	8.25"	28"

t. 360.650.1111
tf. 800.988.8103
f. 360.650.1166

Wood Stone Corporation
1801 W. Bakerview Rd.
Bellingham, WA 98226 USA
info@woodstone-corp.com
woodstone-corp.com

REVISED: WINTER 2023

An ongoing program of product improvement may require us to change specifications without notice.

WOOD STONE

BROILER SHELVES

WOOD STONE

ADD ANOTHER LEVEL TO YOUR FIRE DECK OR MOUNTAIN SERIES OVEN.

Wood Stone's new Broiler Shelves are designed to quickly add additional space inside your oven. Expand your menu with wings, meatballs, tots, roasted veggies or bread sticks, baking at approximately 100° F higher than the floor. All shelves are 10" deep, with a height of 6.125" above the oven floor. Guards on the sides of the shelves are 7.75" tall. Fire Deck shelves are designed to be placed flush with the back wall of the oven, except the 9660 Double Door shelf, which is designed to be placed in the center.

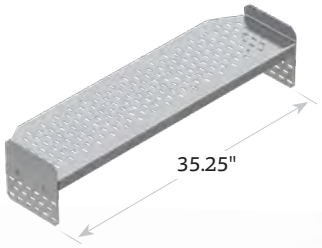

6045

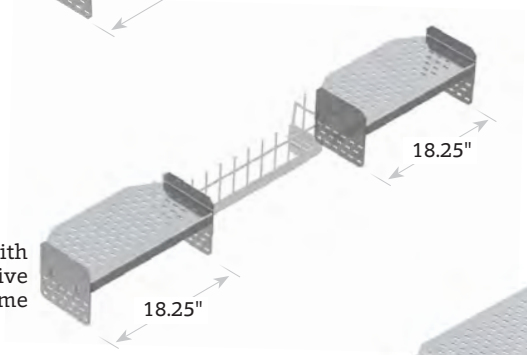

8645 with Decorative Flame

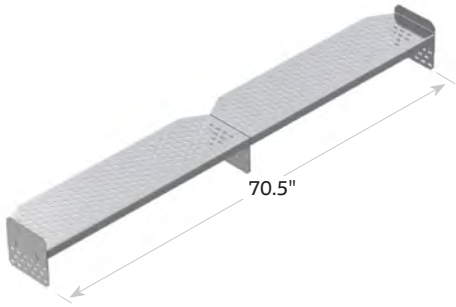

9660

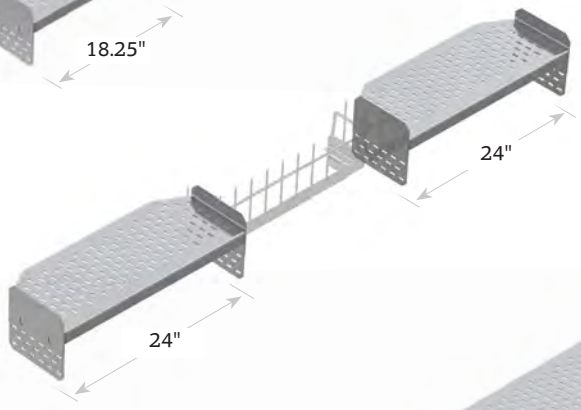

9660 with Decorative Flame

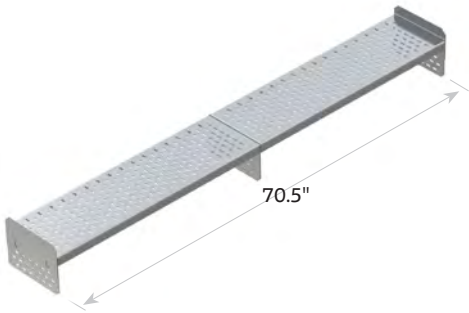

9660 Double Door

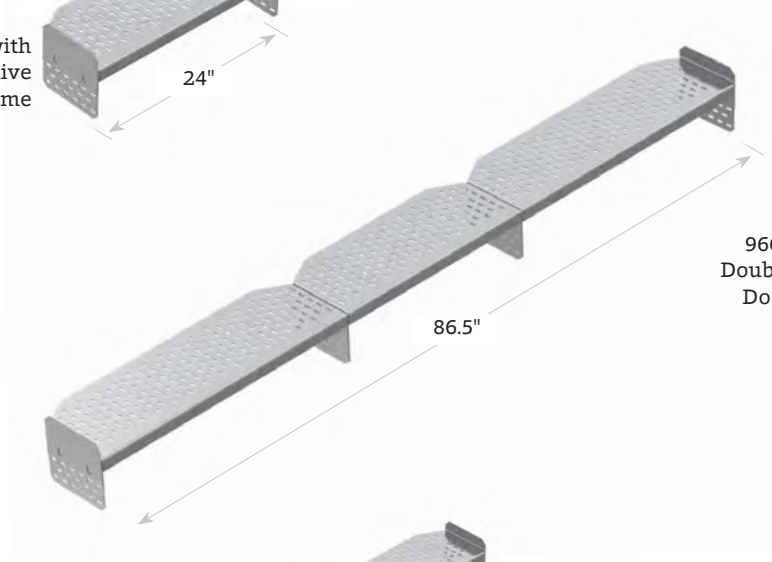

11260

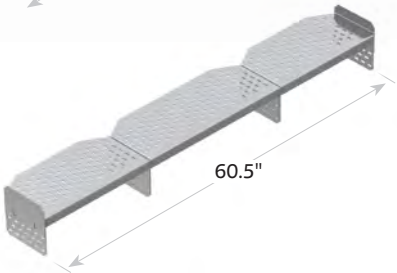

8645

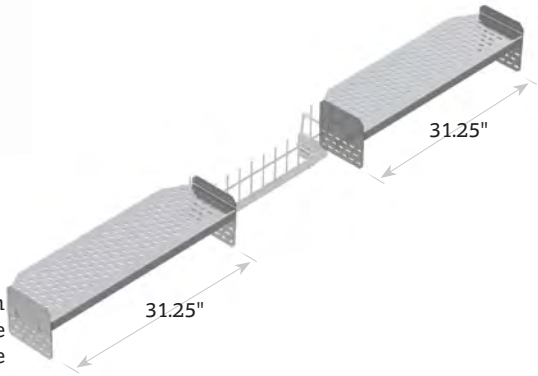

11260 with Decorative Flame

Intertek ANSI Z83.11 CSA 1.8

Intertek ANSI/NSF 4

t. 360.650.1111
tf. 800.988.8103
f. 360.650.1166

Wood Stone Corporation
1801 W. Bakerview Rd.
Bellingham, WA 98226 USA
info@woodstone-corp.com
woodstone-corp.com

REVISED: WINTER 2023

An ongoing program of product improvement may require us to change specifications without notice.

WOOD STONE

 WARNING Cancer and Reproductive Harm - www.P65Warnings.ca.gov

WOOD STONE

BROILER SHELVES

No shelves available for MS4 ovens.

MS5 Single Shelf Kit

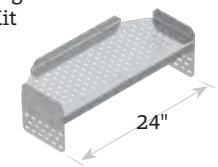

Side Flame

Rear Flame

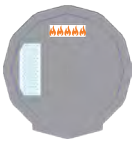

MS5 Dual Shelf Kit

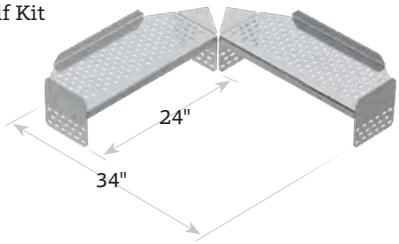

Side Flame

MS6 Single Shelf Kit

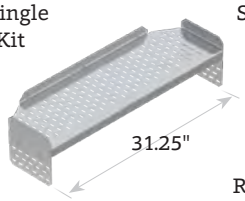

Side Flame

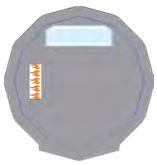

Rear Flame

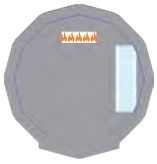

Rear Flame 2 Shelf Kits

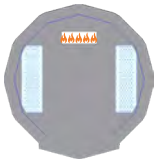

MS6 Dual Shelf Kit

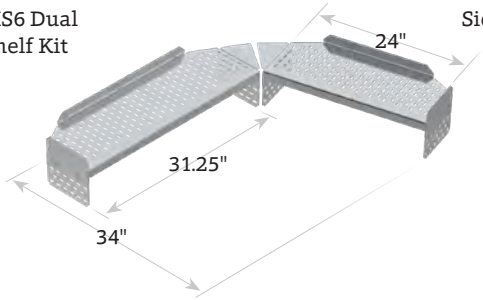

Side Flame

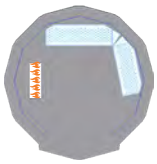

MS7 Single Shelf Kit

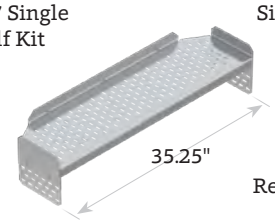

Side Flame

Rear Flame

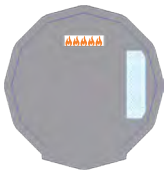

Rear Flame 2 Shelf Kits

Each Mountain Series Shelf Kit comes with End Extensions (left and right) as well as End Guards for customizable configuration.

End Extension

End Guard

When using shelves in larger ovens such as the MS7, we recommend using the Titanium Utility Peels to provide a better experience for the chef.

Titanium Utility Peel

Intertek ANSI Z83.11 CSA 1.8

Intertek ANSI/NSF 4

t. 360.650.1111
tf. 800.988.8103
f. 360.650.1166

Wood Stone Corporation
1801 W. Bakerview Rd.
Bellingham, WA 98226 USA
info@woodstone-corp.com
woodstone-corp.com

REVISED: WINTER 2023

An ongoing program of product improvement may require us to change specifications without notice.

WOOD STONE

WARNING Cancer and Reproductive Harm - www.P65Warnings.ca.gov

CUSTOM FINISHES

WOOD STONE

Wood Stone's ovens are available with a variety of optional finish options including stucco, facade-ready cement board for on-site facade material application and color powder coat.

STUCCO

Stucco is an attractive, durable and relatively low-maintenance oven finish. Bistro Line, Mountain Series and select Fire Deck Series models can be ordered with a wire-mesh exterior designed to allow for the application of stucco. The Traditional Series model comes standard with the wire-mesh exterior.

Note: A minimum of one inch of stucco coating is required to cover all exposed wire mesh on the oven. Stucco by others.

To learn more about custom finish options for Wood Stone ovens, please call us at 800.988.8103.

The Traditional Series' shape (shown) is particularly well-suited for tile application.

WS-BL-4343-S

WS-MS-5-S

WS-FD-9660-S

t. 360.650.1111
tf. 800.988.8103
f. 360.650.1166

Wood Stone Corporation
1801 W. Bakerview Rd.
Bellingham, WA 98226 USA
info@woodstone-corp.com
woodstone-corp.com

REVISED: WINTER 2023

An ongoing program of product improvement may require us to change specifications without notice.

WOOD STONE

 WARNING Cancer and Reproductive Harm - www.P65Warnings.ca.gov

WOOD STONE

CUSTOM FINISHES

FACADE-READY

There are a virtually unlimited number of design possibilities available when integrating a Wood Stone oven into your kitchen. The facade can be finished with any non-combustible decorative material that can be affixed to the oven surface, including tile, stone or brick. (It is always advisable to consult with the appropriate authority having jurisdiction before proceeding as there may be regulations regarding the suitability of various materials.)

With the facade-ready option, we apply a non-combustible cement board directly to the oven so that when it arrives, you and your contractor can immediately begin applying your finished surface using a high-temperature adhesive. (Note temperatures above the oven doorway can reach 200 °F. Select materials and adhesives suitable for that temperature.) The area prepared for facade material can be on just the front (standard), or on the sides and rear upon request.

For additional details on incorporating your oven into a facade, see the Facade Tutorials section of the Wood Stone website.

RED FLAT

POWDER COAT

A powder coat finish is available on Mountain Series and Fire Deck Series ovens in a flat or, for select colors, hammer finish. In addition to the optional powder coat finishes shown below, custom colors can be arranged. If you need a custom color, please call to discuss or send us a color sample. These color simulations on a Fire Deck 9660 only approximate the actual color. If you need the precise color, please contact us.

STANDARD GALVANIZED FINISH

BLUE FLAT

BLACK HAMMER

t. 360.650.1111
tf. 800.988.8103
f. 360.650.1166

Wood Stone Corporation
1801 W. Bakerview Rd.
Bellingham, WA 98226 USA
info@woodstone-corp.com
woodstone-corp.com

REVISED: WINTER 2023

An ongoing program of product improvement may require us to change specifications without notice.

WOOD STONE

AIR-COOLED VIEWING WINDOW

WOOD STONE

Wood Stone now offers an attractive Air-Cooled Viewing Window option for Mountain Series, Fire Deck Series, Designer Series and Duck Ovens. The Viewing Window incorporates a multi-layer design that helps to cool the outer glass surface.

The Viewing Window assembly allows for the installation of a facade wall by others, in a similar fashion to our other facade extension options. The durable and heat resistant ceramic-glass sections can be removed for cleaning.

The Air-Cooled Viewing Window is designed to provide a window assembly that is much cooler than the oven internal temperature. However, be aware that when in operation, temperatures on the external glass and frame can range from 120 °F to nearly 200 °F. Surfaces above 140 °F can cause burns. A Wood Stone oven is a high temperature commercial appliance. Care should be taken when designing an installation utilizing a Viewing Window to minimize the opportunity for anyone to directly contact the Viewing Window glass or frame while the oven is in operation or hot. In many cases a barrier (by others) will be necessary to ensure a safe installation.

This option is not recommended for ovens burning solid fuel due to potential sooting issues encountered on the glass when burning wood or coal.

Also, be aware that there is some production loss when adding an Air-Cooled Viewing Window because the additional opening removes some of the dome's mass.

Mountain Series
180° Viewing Window
Flat

Mountain Series
180° Viewing Window
Curved

Fire Deck Series
180° Viewing Window
Flat

Viewing Window Curved
Installation Cutaway View

t. 360.650.1111
tf. 800.988.8103
f. 360.650.1166

Wood Stone Corporation
1801 W. Bakerview Rd.
Bellingham, WA 98226 USA
info@woodstone-corp.com
woodstone-corp.com

REVISED: WINTER 2023

An ongoing program of product improvement may require us to change specifications without notice.

WOOD STONE

WOOD STONE

AIR-COOLED VIEWING WINDOW

MOUNTAIN SERIES MODELS

For Mountain Series ovens, the Air-Cooled Viewing Window is available with either a flat face frame, or a curved face frame. For WS-MS-5 (Mt. Adams) WS-MS-6 (Mt. Baker) and WS-MS-7 (Mt. Rainier) ovens, labeled positions shown on the diagram to the right—90°, 120°, 180°, 240° and 270°—are available for installation of a Viewing Window. Call the factory to discuss Viewing Window options for the WS-MS-4.

WS-MS Viewing Window Flat Depth

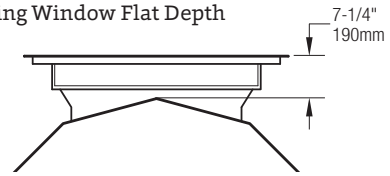

WS-MS Viewing Window Curved Depth

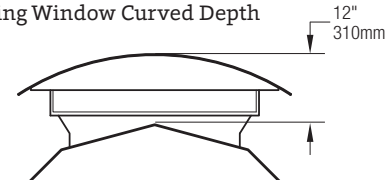

FIRE DECK SERIES MODELS

For Fire Deck Series ovens, the Air-Cooled Viewing Window (flat face only) may be located on the rear of the oven.

WS-FD Viewing Window Flat Depth

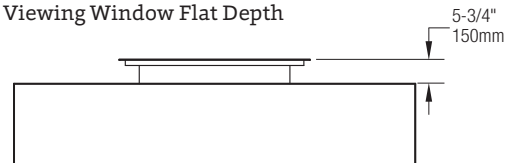

WS-FD Viewing Window Flat Dimensions

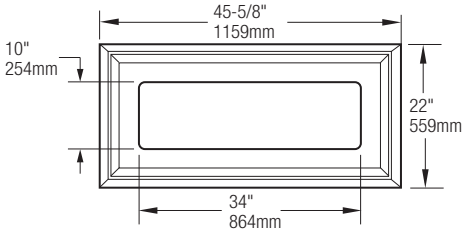

DESIGNER SERIES & DUCK OVENS

The Air-Cooled Viewing Window is also available for our Designer Series and Duck Ovens. Contact the factory for dimensions.

Available Position Guide for Mountain Series Ovens *(ex. WS-MS-4)*

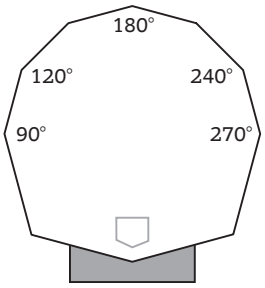

WS-MS Viewing Window Flat

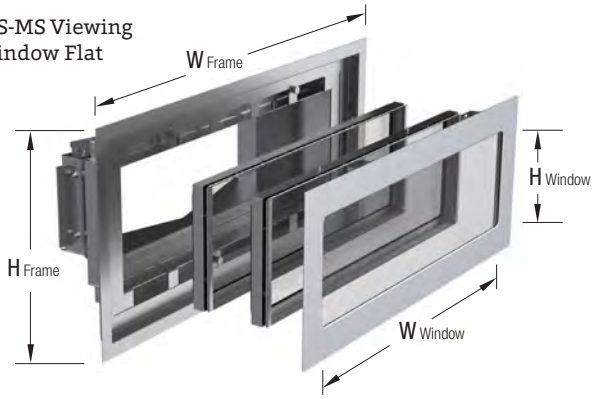

WS-MS Viewing Window Curved

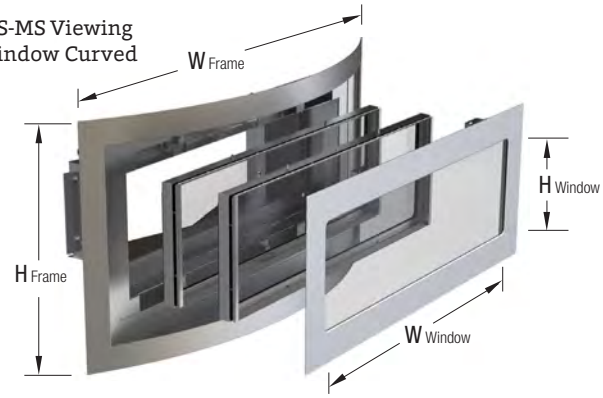

WS-MS Viewing Window Dimensions

		Frame Exterior			Window	
	Shape	W	H	Radius	W	H
WS-MS-5	Flat	45.5" 1156mm	22" 559mm	–	33.6" 853mm	10" 254mm
	Curved	47" 1194mm	23.85" 606mm	43.5" 1105mm		
WS-MS-6	Flat	45.5" 1156mm	22" 559mm	–		
	Curved	47" 1194mm	23.85" 606mm	49" 1244mm		
WS-MS-7	Flat	45.5" 1156mm	22" 559mm	–		
	Curved	47" 1194mm	23.85" 606mm	54.5" 1384mm		

WARNING Cancer and Reproductive Harm - www.P65Warnings.ca.gov

THIS PAGE INTENTIONALLY LEFT BLANK

t. 360.650.1111
tf. 800.988.8103
f. 360.650.1166

Wood Stone Corporation
1801 W. Bakerview Rd.
Bellingham, WA 98226 USA
info@woodstone-corp.com
woodstone-corp.com

REVISED: WINTER 2023

An ongoing program of product improvement may require us to change specifications without notice.

WOOD STONE

WOOD STONE

LIMITED WARRANTY

Wood Stone warrants its equipment to the original purchaser against defects in material or manufacture for a period of one year from the original date of purchase, subject to the following exclusions and limitations.

All WARRANTY SERVICE MUST BE PRE-APPROVED BY WOOD STONE.

Please contact the factory first at 800.988.8103 or 360.650.1111, seven days a week. Our normal business hours are 8am to 5pm PST Monday-Friday. If calling during non-business hours, follow the recorded instructions for emergency service and a Wood Stone service technician will get back to you promptly.

EXCLUSIONS

The warranties provided by Wood Stone do not apply in the following instances:

1. In the event that the equipment is improperly installed. Proper installation is the responsibility of the installer; proper installation procedures are prescribed by the Wood Stone Installation and Operation Manual.
2. In the event the equipment is improperly or inadequately maintained. Proper maintenance is the responsibility of the user; proper maintenance procedures are prescribed in the Wood Stone Installation and Operation Manual. Burner problems resulting from debris or ash in the burner well will not be covered by the warranty. Call with questions regarding maintenance frequency.
3. In the event that the failure or malfunction of the appliance or any part thereof is caused by abnormal or improper use or is otherwise not attributable to defect in material or manufacture.
4. In the event that the appliance, by whatever cause, has been materially altered from the condition in which it left the factory.
5. In the event that the rating plate has been removed, altered or obliterated.
6. On parts that would be normally worn or replaced under normal conditions.
7. Normal cracking due to expansion and contraction stress relief in either the dome or oven floor.
8. In wood-fired equipment configurations, in the event that pressed log products of any type have been burned in the equipment.
9. In coal-fired oven configurations, in the event any type of coal other than an anthracite coal fuel has been used.
10. Damage resulting from the use of chemical cleaning products in the oven, as well as any damage from liquids or chemicals (including water) being poured or sprayed into the oven.

If any oral statements have been made regarding this appliance, such statements do not constitute warranties and are not part of the contract of sale. This Limited Warranty constitutes the complete, final and exclusive statement with regard to warranties.

THIS LIMITED WARRANTY IS EXCLUSIVE AND IN LIEU OF ALL OTHER WARRANTIES WHETHER WRITTEN, ORAL OR IMPLIED, INCLUDING, BUT NOT LIMITED TO, ANY WARRANTY OF MERCHANTABILITY OR FITNESS FOR PARTICULAR PURPOSE OR WARRANTY AGAINST LATENT DEFECTS.

LIMITATIONS OF LIABILITY

In the event of warranty claim or otherwise, the sole obligation of Wood Stone shall be the repair and/or replacement, at the option of Wood Stone, of the appliance or component or part thereof. Such repair or replacement shall be at the expense of Wood Stone with the exception of travel over 100 miles or two hours, overtime, and holiday charges which shall be at the expense of the purchaser. Any repair or replacement under this warranty does not constitute an extension of the original warranty for any period of the appliance or for any component or part thereof. Parts to be replaced under this warranty will be repaired or replaced at the option of Wood Stone with new or functionally operative parts. The liability of Wood Stone on any claim of any kind, including claims based on warranty, expressed or implied, contract, negligence, strict liability or any other theories shall be solely and exclusively the repair or replacement of the product as stated herein, and such liability shall not include, and purchaser specifically renounces any rights to recover, special, incidental, consequential or other damages of any kind whatsoever, including, but not limited to, injuries to persons or damage to property, loss of profits or anticipated profits, or loss of use of the product.

TO SECURE WARRANTY SERVICE:

If you claim a defect covered by this Limited Warranty contact:

Wood Stone Corporation
Attn: Service Department
1801 W. Bakerview Rd.
Bellingham, WA 98226 USA
Phone 800.988.8103 or 360.650.1111