Facade Tutorials

Incorporating your Wood Stone oven into a facade.

Table of Contents

INITIAL CONSIDERATIONS 2

BISTRO LINE Facade Tutorial 3

MOUNTAIN SERIES Facade Tutorials 4

1. Flat Wall Installation 6
2. Corner with Facade-Ready Oven Front 11
3. Flat Wall with Extensions & Hood 15
4. Flat Wall with Extensions & Hood Soffit 21
5. Cylinder Wall (Silo) 27
6. Large Radius Wall with Extensions & Hood 31
7. Flat Wall with Arched Doorway & Service Panel Extension 37
8. Cylinder Wall (Silo) with Viewing Window 41
9. On-Site Underlayment 46

FIRE DECK SERIES Facade Tutorials 50

1. Directly-on-Oven Installation 51
2. Flat Wall with Air-Cooled Viewing Window 54

Wood Stone

WOOD STONE CORPORATION
1801 W. Bakerview Rd.
Bellingham, WA 98226 USA

t. 360.650.1111
tf. 800.988.8103
f. 360.650.1166

info@woodstone-corp.com
woodstone-corp.com

REV
004

Initial Considerations

There are a virtually unlimited number of design possibilities available when integrating a Wood Stone oven into your kitchen. This booklet covers initial considerations, basic layouts and construction considerations to help you successfully incorporate your Wood Stone oven into a facade.

The shape of Mountain Series ovens makes them ideal for inclusion into a wide range of structural plans, including flat and curved walls, corners, cylinders and even free-form shapes.

Because of their rectangular shape, Bistro Line and Fire Deck Series ovens are often incorporated into a kitchen design by applying facade materials, such as tile, stone or brick, directly onto the oven exterior.

To ensure a surprise-free facade installation with any model, the following questions should be addressed early in the design process:

1. VENTING & CLEARANCES

Is the oven going to be vented using the direct connect method, or with a Listed Type 1 Exhaust Hood? (See the Oven Venting section on the Wood Stone website or the Installation and Operation Manual for details about these two methods.) With either method, the facade design must allow for proper airflow and adequate clearances. With hood venting, the design will need to accommodate both the hood and the required clearance from the facade face to the hood overhang for filter removal.

2. THE FACADE SURROUND

Do you want to install a finish wall across the face of the oven or install the oven within an enclosure? Will you fabricate the connection between the oven and facade, or use optional Wood Stone facade extensions? An extensive assortment of facade extensions for Mountain Series ovens have been designed to substantially reduce on-site fabrication and installation time, taking the guesswork out of the construction process and helping to ensure a durable, safe installation. A wide array of doorway, storage box and service panel facade extensions can be seen on the Mountain Series Facade Extensions section on the Wood Stone website.

3. FACADE MATERIAL UNDERLAYMENT

Do you want to install tile or stone directly to the oven? If so, a suitable non-combustible underlayment should be attached to the oven first. Will underlayment be installed on on site, or will the oven be ordered facade-ready? Facade-ready ovens come with the non-combustible cement board underlayment pre-installed and ready for immediate application of the facade materials. Proper allowances are made for combustion air clearances, and relevant components are extended to accommodate the depth of applied materials to create a clean finished look.

4. STUCCO-READY OVENS

For a traditional look, Mountain Series and Bistro Line ovens are available stucco-ready. The sheet metal oven body exterior is omitted, and instead the fully insulated oven body is covered with steel mesh, ready for field application of non-combustible stucco (by others). Stucco-ready ovens may be vented as a direct connect or installed under a Listed Type 1 Exhaust Hood.

We recommend the following links for additional installation information:

- Photo Gallery
- Wood Stone Facade Extensions
- Tools & Accessories – Hoods
- Custom Oven Finishes
- Unloading & Moving
- Installation Clearances
- Wood Stone Oven Venting
- Oven Venting Do's and Don'ts
- CAD and REVIT Libraries
- Installation and Operation Manuals

Submit your installation and ventilation plans to your local authority having jurisdiction before proceeding.

bistro line

This tutorial covers facade installation on Bistro Line ovens. Illustrations are representative of all Bistro Line models. Notable specific model differences include multiple Flame Height Control Knobs on dual burner models and no Flame Height Control Knobs on wood-fired only models. The oven used as the example in this tutorial is a standard Bistro WS-BL-4343-RFG oven. Specification Sheets, CAD symbols and Revit Libraries for all Bistro Line ovens can be found in the Downloads section on the Wood Stone website.

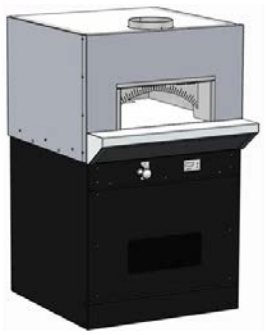

THE BASE OVEN

Mounted on a steel stand with a black powder coat finish, the Bistro ovens are available in stainless steel (standard), color powder coat, galvanized steel, as well as facade-ready. Optionally, on facade-ready ovens, non-combustible cement board is installed at the factory, ready for installation of the facade material.

Step 1. NON-COMBUSTIBLE UNDERLAYMENT

To prepare the oven for the installation of non-combustible facade materials such as tile, stone or brick, a non-combustible base must first be installed. **This can be accomplished one of two ways:**

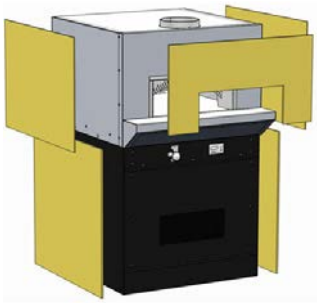

Option 1 On-Site Underlayment Installation

With this option, the oven would be ordered in stainless or galvanized steel. Non-combustible cement board underlayment can be installed on this surface.

Cement board, cut-to-size (taking care to avoid covering any critical operational or service access areas), must be glued and screwed into the steel underlayment. The adhesive must be appropriate for high-temperature environments; pre-drilling is required for stainless steel ovens; countersinking is required for all screws.

Option 2: Factory-Installed Underlayment

With the facade-ready option, non-combustible cement board is installed at the factory, ready for the application of facade materials. An extended stainless steel lip around the doorway creates a clean edge between the oven and facade material. The standard facade-ready configuration is front-only. Facade-ready sides are available as an additional option. Please specify at time of order.

Step 2. ADD FACADE MATERIALS

The facade wall can be finished with any non-combustible decorative material that can be affixed to the wall surface, including tile, stone or brick. It is always advisable to consult with the appropriate authority having jurisdiction before proceeding as there may be regulation regarding the suitability of various materials. Temperatures above the oven doorway can reach 200 °F. Select materials and adhesives suitable for that temperature.

The Flame Height Control Knob is required to operate the oven. It must be fully accessible after all finishing is completed.

If the Service Panel is covered, the facade must allow for the same amount of air intake area as is supplied by the perforated, factory-provided Service Panel. The Service Panel must be removable and provide the same area of access as the supplied panel. All service and maintenance to the oven occurs from beneath the oven—the Service Panel is the ONLY access to the area beneath the oven.

mountain series

The design of the Mountain Series ovens lends itself to countless facade possibilities, and we offer a large assortment of optional Facade Extensions to help—reducing construction complexity to get you cooking sooner. The following tutorials present a sampling of installation configurations, including flat, cylindrical and curved walls, hood or direct connect venting, optional doorways, viewing windows, service panels, storage box extensions and mantles. See the Photo Gallery on the Wood Stone website for even more inspiration.

Options

1 Flat Wall Installation

This tutorial covers flat wall facade installations with an optional Mantle and an on-site fabricated doorway extension. The oven is vented via the direct connect venting method. (Tutorial #3 covers flat wall installations utilizing the optional Wood Stone Doorway Facade Extension.)

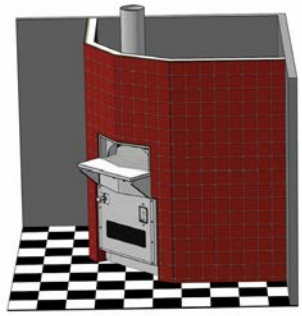

2 Corner with Facade-Ready Oven Front

This tutorial covers corner facade installations where the facade walls are built to the sides of the oven and the oven front is facade-ready. The oven includes an optional Mantle, standard Service Panel and is vented via the direct connect venting method.

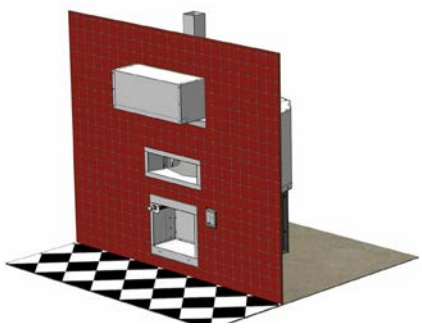

3 Flat Wall with Extensions & Hood

This tutorial covers flat wall facade installations utilizing the optional Wood Stone Doorway Facade Extension Flat, Storage Box Extension Flat and Flat Face Listed Type 1 Exhaust Hood.

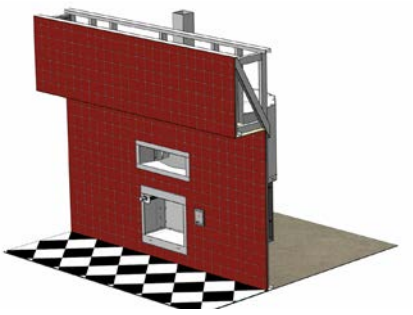

4 Flat Wall with Extensions & Hood Soffit

This tutorial covers flat wall facade installations with a hood soffit, utilizing the optional Wood Stone Doorway Facade Extension Flat, Storage Box Extension Flat and Flat Face Listed Type 1 Exhaust Hood.

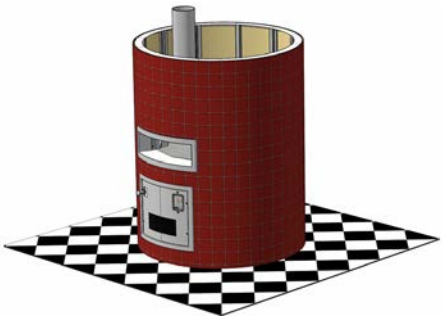

5 Cylinder Wall (Silo)

This tutorial covers cylindrical (silo) facade installations, utilizing the optional Wood Stone Doorway Facade Extension Curved – Small Radius and Service Panel Extension Curved – Small Radius and vented via the direct connect venting method.

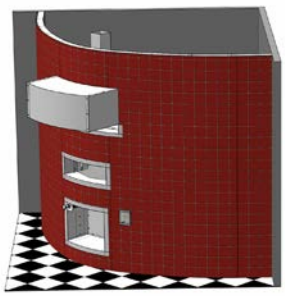

6 Large Radius Wall with Extensions & Hood

This tutorial covers large radius corner wall facade installations utilizing the optional Wood Stone Doorway Facade Extension Curved – Large Radius, Storage Box Extension Curved – Large Radius and a Curved Face Listed Type 1 Exhaust Hood.

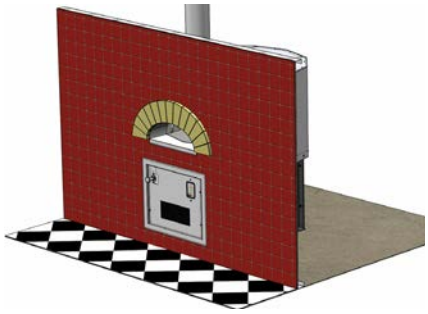

7 | Flat Wall with Arched Doorway & Service Panel Extension

This tutorial covers flat wall facade installations utilizing the optional Wood Stone Doorway Facade Extension Arched and Service Panel Extension, vented via the direct connect venting method.

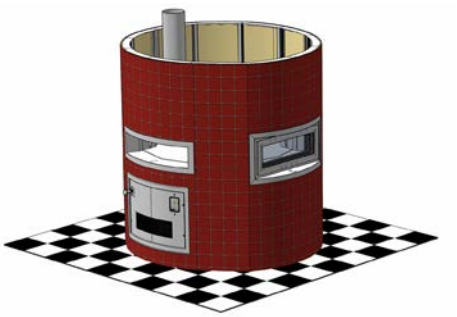

8 | Cylinder Wall (Silo) with Viewing Window

This tutorial covers cylindrical (silo) facade installations with optional Doorway and Service Panel Curved – Small Radius Extensions, plus a Viewing Window. The oven is vented via the direct connect venting method.

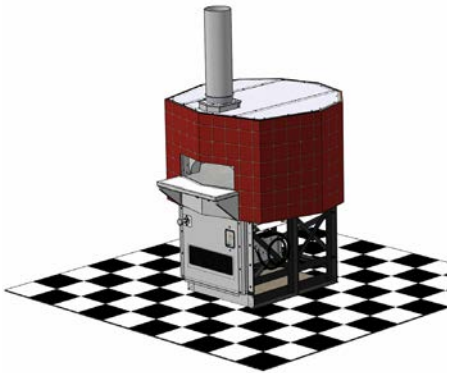

9 | On-Site Underlayment

This tutorial covers oven installations with an optional Mantle, standard Service Panel, with on-site underlayment and fabrication of a doorway facade lip. The oven is vented via the direct connect venting method.

Questions?
Please call us toll free at 800.988.8103. Our business hours are 8am to 4:30pm PST, Monday–Friday.

Option 1 Flat Wall Installation

Wood Stone

mountain series

This tutorial covers flat wall facade installations with an optional Mantle and an on-site fabricated doorway extension. (Tutorial #3 covers flat wall installations utilizing the optional Wood Stone Doorway Facade Extension.) The oven is vented via the direct connect venting method.

Illustrations in this tutorial are representative of all MS models. However, there are some differences between models. Notable specific model differences include the absence of a Flame Height Control Knob on ovens without a radiant flame (WS-MS-W and WS-MS-W-IR models). The WS-MS-4 model has a flat face above the doorway, and if equipped with an IR burner, does not support Storage Box Extensions due to space limitations.

THE BASE OVEN

The graphic to the right shows the WS-MS-5-RFG-IR oven as it would arrive. Specification Sheets, CAD symbols and Revit Libraries for all Mountain Series ovens can be found in the Downloads section on the Wood Stone website.

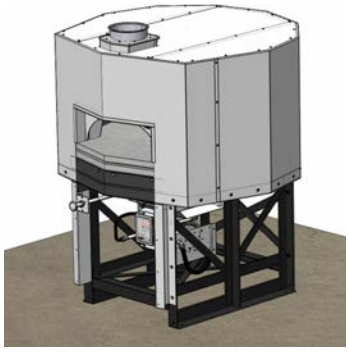

Step 1. INSTALL SUPPLIED OVEN COMPONENTS

Mount the Service Panel, Toe Kick and optional Mantle per the instructions in the Installation and Operation Manual.

Note the location of the perforated air intake on the Service Panel. Combustion air flows into the space under the oven through this area, which must be left free of obstructions. See Airflow Detail below.

To avoid common mistakes that affect airflow, see the Oven Venting Do's and Don'ts section on the Wood Stone website.

Connect the flue to the oven's flue collar. This flue must be a grease-rated duct. If the oven is being completely enclosed, make certain the duct system has been approved by the authority having jurisdiction before covering. See the Oven Venting section on the Wood Stone website for more details.

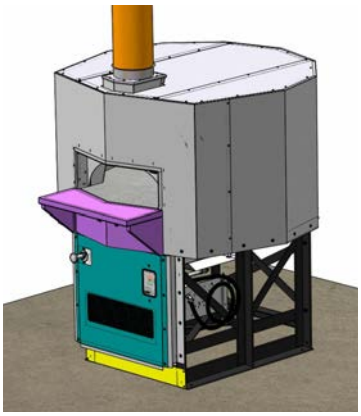

DETAIL > AIRFLOW

Air flows into the space under the oven through the perforated air intake on the front of the Service Panel.

This area must be free of obstructions to allow proper airflow. The burners in the gas oven will not operate without sufficient combustion air. To avoid common installation mistakes that affect airflow, see the Oven Venting Do's and Don'ts section on the Wood Stone website.

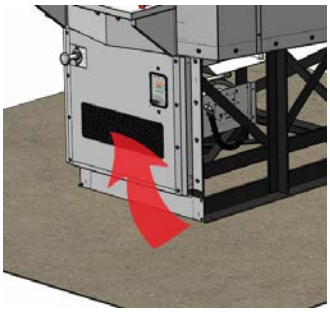

Step 2. FABRICATE CUSTOM COMPONENTS

In this example, a customer-fabricated doorway extension is shown in red. (**Note:** Optional Wood Stone Doorway Facade Extensions, available flat, curved or arched, are available.)

The doorway extension must be stainless steel to meet sanitary requirements. We recommend 14 gauge stainless steel. The extension must fit snugly and be welded with a continuous weld to the inside of the outer lip of the oven doorway without any gaps.

The extension must not protrude into the oven doorway, past the outer lip of the doorway. (If the extension were to protrude into the doorway, it would block the flue passageway and impede airflow.) The flange around the doorway should allow space for stud construction, underlayment and facade material. See Welding Detail below.

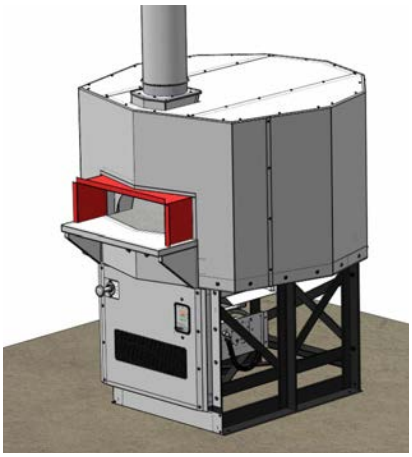

DETAIL > WELDING

The doorway extension must be stainless steel to meet sanitary requirements. We recommend 14 gauge stainless steel. The extension must fit snugly and be welded with a continuous weld to the inside of the outer lip of the oven doorway without any gaps.

The extension must not protrude into the oven doorway, past the outer lip of the doorway. (If the extension were to protrude into the doorway, it would block the flue passageway and impede airflow.) The flange around the doorway should allow space for stud construction, underlayment and facade material.

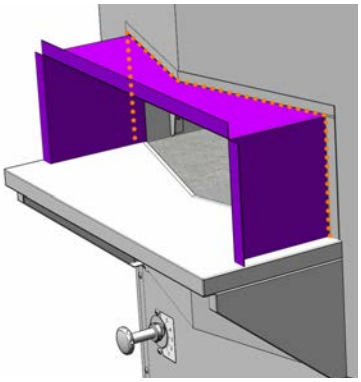

Step 3. BUILD STUD WALL

Metal studs, shown in green, are recommended. Around the doorway area, metal studs are required. Maintain a 1-inch clearance from the oven to combustible materials. Do not pack this airspace with insulation or any other material. While a zero-inch clearance from the oven to non-combustible materials is allowed, the respective clearances to combustibles are transferred to those non-combustibles.

Building materials 6 inches to either side and above the doorway must be non-combustible. See Clearances Detail below.

The Service Panel must be left accessible and unobstructed after installation for air intake and routine service of the oven burner. See Service Panel Detail on next page.

The oven controller is mounted in the Service Panel. The controller can optionally be mounted in a different position, i.e. in the wall next to the oven. When specified at the time of order, the controller is shipped with a longer wire harness to allow for custom placement, and the Service Panel doesn't have the knockout for the controller. When mounting the controller box on the wall, make sure the front face of the controller protrudes approximately 3/4 inches beyond the finished wall surface to allow the controller box to be opened for service if necessary.

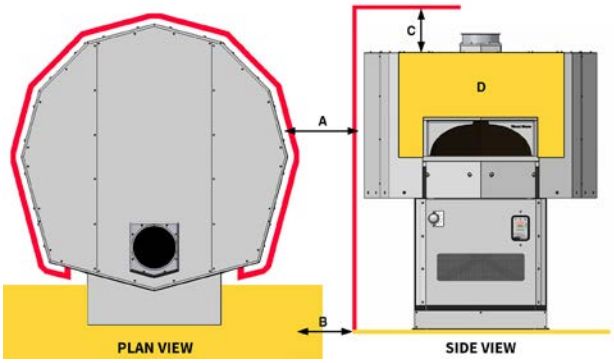

DETAIL > CLEARANCES

A major cause of oven-related fires is a failure to maintain required clearances to combustible material. Required clearances for Mountain Series ovens are defined as follows:

A. Provide 1-inch side clearance to combustible building materials. Do not pack this airspace with insulation or any other material.

B. Provide a non-combustible floor surface AND for ovens utilizing solid fuel, a non-combustible floor surface covering at least 30" to each side, and 36" in front of the door opening.

C. Provide 6" top clearance to combustible building materials.

D. Any facade materials 6 inches to either side of the doorway and above must be of non-combustible construction with no exceptions.

Note: A zero-inch clearance to non-combustible construction is allowed. However, the respective clearances to combustibles are transferred to these non-combustibles.

Step 4. INSTALL NON-COMBUSTIBLE UNDERLAYMENT

The material shown in beige is non-combustible cement board. Non-combustible material is required 6 inches to either side and above the oven doorway.

Non-combustible material is required anywhere the facade touches the doorway or mantle. Generally, non-combustible cement board is also used as facing material within the lower recessed area between the studs, adjacent to the Service Panel and mantle support. Drywall and Sheetrock are considered a combustible and must not be used.

If the Service Panel will be covered, the covering must allow for the same amount of air intake as is supplied by the perforated, factory-provided Service Panel.

All service and maintenance to the oven occur from beneath the oven, and the Service Panel is the ONLY access to the area beneath the oven. The Service Panel must be removable and provide the same area of access as the supplied panel. See Service Panel Detail below.

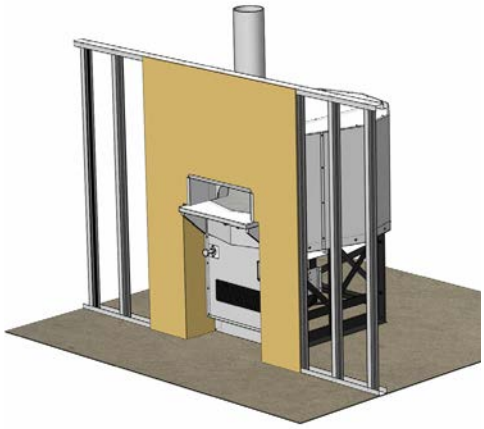

DETAIL > SERVICE PANEL

When the facade is complete, the Service Panel must remain removable. "A" represents the unobstructed path of the panel for removal. "B" represents the width necessary to keep that path clear after the installation of all building and facade materials.

Any facade or enclosure below the mantle of gas-fired or combination ovens must allow for (1) unobstructed access for removal of service/intake panel or storage box, (2) easy access to all controls and (3) sufficient combustion air for gas burners.

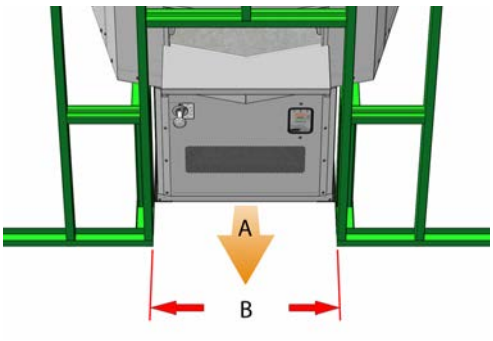

Step 5. INSTALL ADDITIONAL UNDERLAYMENT

Drywall (shown in yellow) is installed on the stud wall. While building materials more than 1 inch away from the oven do not need to be non-combustible, many installers choose to make the entire wall out of the non-combustible cement board to simplify construction and create a consistent facade underlayment.

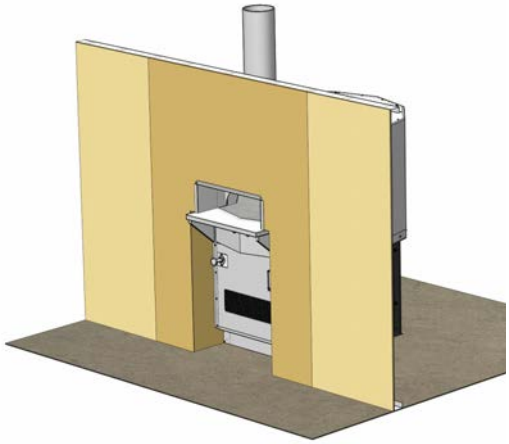

Step 6. ADD FACADE MATERIAL

The facade wall can be finished with any non-combustible decorative material that can be affixed to the wall surface, including tile, stone or brick. It is always advisable to consult with the appropriate authority having jurisdiction before proceeding as there may be regulations regarding the suitability of various materials. Temperatures above the oven doorway can reach 200 °F—select materials and adhesives suitable for this temperature.

It is necessary for the proper operation of our ovens that the Flame Height Control Knob be fully accessible after all finishing is completed. This knob controls temperature in our gas ovens. See Flame Height Control Knob Detail below.

An optional Flame Height Control Knob Extension Kit is available to extend the length of the shaft in order to accommodate any facade depth.

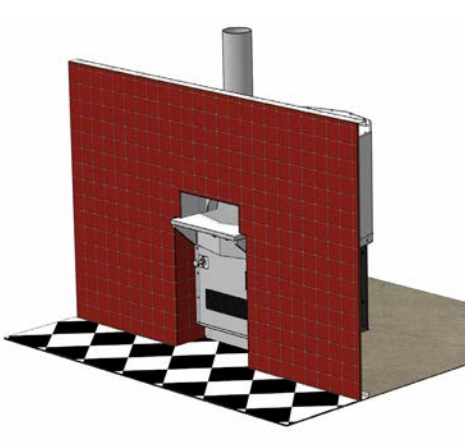

DETAIL > FLAME HEIGHT CONTROL KNOB

The Flame Height Control Knob adjusts the height of the radiant flame inside the oven. It is required to operate the oven and must be fully accessible after all finishing is completed.

An optional Flame Height Control Knob Extension Kit is available to extend the length of the shaft in order to accommodate any facade depth.

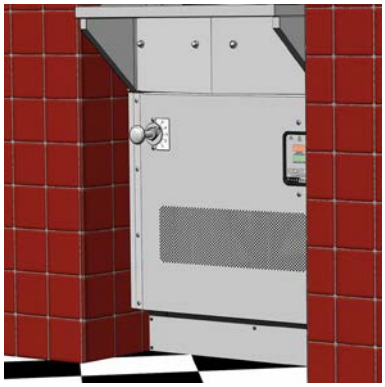

MORE INFORMATION

To see innovative design solutions created by other Wood Stone customers, visit the Photo Gallery on the Wood Stone website.

We recommend the following links for additional installation information:

- Wood Stone Facade Extensions
- Tools & Accessories – Hoods
- Custom Oven Finishes
- Unloading & Moving
- Installation Clearances
- Wood Stone Oven Venting
- Oven Venting Do's and Don'ts
- CAD and REVIT Libraries
- Installation and Operation Manuals

Option 2 | Corner with Facade-Ready Oven Front

Wood Stone

mountain series

This tutorial covers corner facade installations where the facade walls are built to the sides of the oven, and the oven front is facade-ready. The oven includes an optional Mantle and standard Service Panel. The oven is vented via the direct connect venting method.

Illustrations in this tutorial are representative of all MS models. However, there are some differences between models. Notable specific model differences include the absence of a Flame Height Control Knob on ovens without a radiant flame (WS-MS-W and WS-MS-W-IR models). The WS-MS-4 model has a flat face above the doorway, and if equipped with an IR burner, does not support Storage Box Extensions due to space limitations.

THE BASE OVEN

The graphic to the right shows the WS-MS-5-RFG-IR facade-ready oven as it would arrive. Facade-ready ovens include pre-installed underlayment and an extended lip around the doorway, providing a finished look for the edges of the facade material. Specification Sheets, CAD symbols and Revit Libraries for all Mountain Series ovens can be found in the Downloads section on the Wood Stone website.

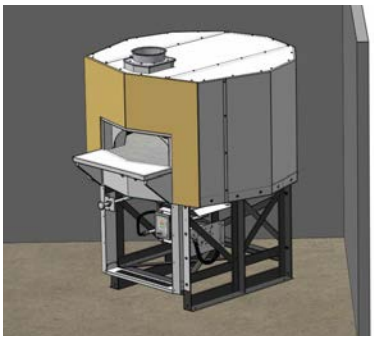

Step 1. INSTALL SUPPLIED OVEN COMPONENTS

Mount the Service Panel, Toe Kick and optional Mantle per the instructions in the Installation and Operation Manual.

Note the location of the perforated air intake on the Service Panel. Combustion air flows into the space under the oven through this area, which must be left free of obstructions. See Airflow Detail below.

To avoid common mistakes that affect airflow, see the Oven Venting Do's and Don'ts section of the Wood Stone website.

Connect the flue to the oven's flue collar. This flue must be a grease-rated duct. If the oven is being completely enclosed, make certain the duct system has been approved by the authority having jurisdiction before covering. See the Oven Venting section of the Wood Stone website for more details.

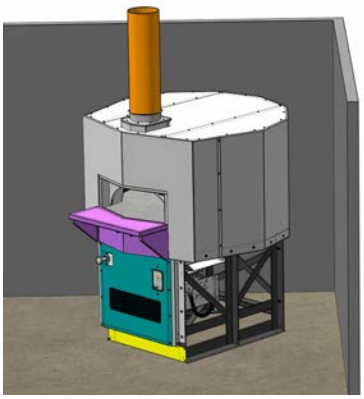

DETAIL > AIRFLOW

Air flows into the space under the oven through the perforated air intake on the front of the Service Panel.

This area must be free of obstructions to allow proper airflow. The burners in the gas oven will not operate without sufficient combustion air. To avoid common installation mistakes that affect airflow, see the Oven Venting Do's and Don'ts section on the Wood Stone website.

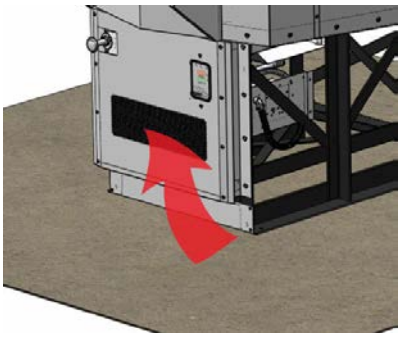

Option 2 Corner with Facade-Ready Oven Front

Step 2. BUILD STUD WALL

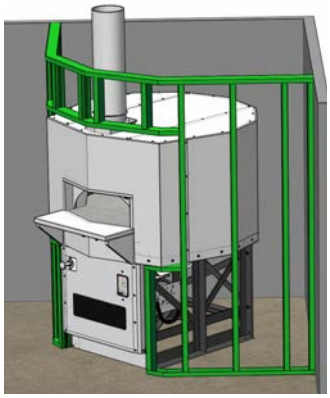

The stud wall is shown in green. Metal studs are required above the oven face because of proximity to the duct. Maintain a 1-inch clearance from the oven to combustible materials. Do not pack this airspace with insulation or any other material. A zero-inch clearance from the oven to non-combustible materials is allowed. However, the respective clearances to combustibles are transferred to those non-combustibles.

Building materials 6 inches to either side and above the doorway must be non-combustible. See Clearances Detail below.

The Service Panel must be left accessible and unobstructed after installation for air intake and routine service of the oven burner. See Service Panel Detail below.

The oven controller is mounted in the Service Panel. The controller can optionally be mounted in a different position, i.e. in the wall next to the oven. When specified at the time of order, the controller is shipped with a longer wire harness to allow for custom placement and the Service Panel doesn't have the knockout for the controller. When mounting in the wall, make sure the front face of the controller protrudes approximately 3/4 inches beyond the finished wall surface to allow the controller box to be opened for service if necessary.

DETAIL > CLEARANCES

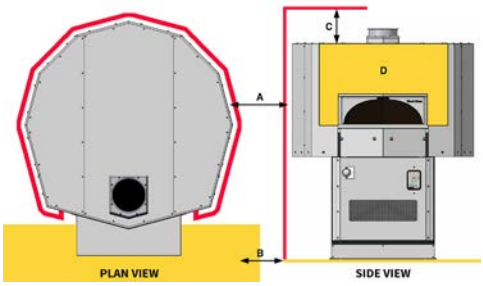

A major cause of oven-related fires is a failure to maintain required clearances to combustible material. Required clearances for Mountain Series ovens are defined as follows:

A. Provide 1-inch side clearance to combustible building materials. Do not pack this airspace with insulation or any other material.

B. Provide a non-combustible floor surface AND for ovens utilizing solid fuel, a non-combustible floor surface covering at least 30" to each side, and 36" in front of the door opening.

C. Provide 6" top clearance to combustible building materials.

D. Any facade materials 6 inches to either side of the doorway and above must be of non-combustible construction with no exceptions.

Note: A zero-inch clearance to non-combustible construction is allowed. However, the respective clearances to combustibles are transferred to these non-combustibles.

DETAIL > SERVICE PANEL

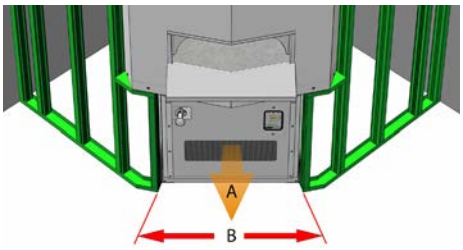

When the facade is complete, the Service Panel must remain removable. "A" represents the unobstructed path of the Service Panel for removal. "B" represents the width necessary to keep that path clear after the installation of all building and facade materials.

Any facade or enclosure below the mantle of gas-fired or combination ovens must allow for (1) unobstructed access for removal of service/intake panel or storage box, (2) easy access to all controls, and (3) sufficient combustion air for gas burners.

Corner with Facade-Ready Oven Front

Wood Stone

Step 3. INSTALL NON-COMBUSTIBLE UNDERLAYMENT

The material shown in beige is non-combustible cement board. Non-combustible material is required 6 inches to either side and above the oven doorway.

Non-combustible material is required anywhere the facade touches the doorway or mantle. In this example, non-combustible cement board is used as the underlayment to surround the doorway and mantle. Drywall and Sheetrock are considered a combustible and must not be used.

Step 4. INSTALL ADDITIONAL UNDERLAYMENT

Drywall (shown in yellow) is installed on the stud wall. While building materials more than 1 inch away from the oven do not need to be non-combustible, many installers choose to make the entire wall out of the non-combustible cement board to simplify construction and create a consistent facade underlayment.

Corner with Facade-Ready Oven Front

Step 5. ADD FACADE MATERIAL

The facade wall can be finished with any non-combustible decorative material that can be affixed to the wall surface, including tile, stone or brick. It is always advisable to consult with the appropriate authority having jurisdiction before proceeding as there may be regulations regarding the suitability of various materials. Temperatures above the oven doorway can reach 200 °F—select materials and adhesives suitable for this temperature.

It is necessary for the proper operation of our ovens that the Flame Height Control Knob be fully accessible after all finishing is completed. This knob controls temperature in our gas ovens. See Flame Height Control Knob Detail below.

An optional Flame Height Control Knob Extension Kit is available to extend the length of the shaft in order to accommodate any facade depth.

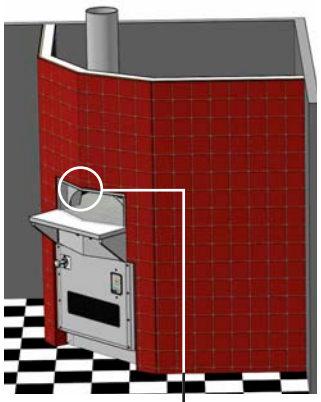

COMMON INSTALLATION DIMENSIONS

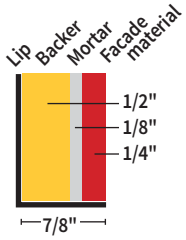

Note: Depending on the thickness of facade material, mortar and backer used, there may be a portion of the facade lip that extends beyond the finished facade, exposing sharp corners. This can safely be trimmed or ground off.

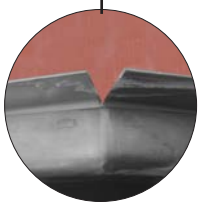

DETAIL > FLAME HEIGHT CONTROL KNOB

The Flame Height Control Knob adjusts the height of the radiant flame inside the oven. It is required to operate the oven and must be fully accessible after all finishing is completed.

An optional Flame Height Control Knob Extension Kit is available to extend the length of the shaft in order to accommodate any facade depth.

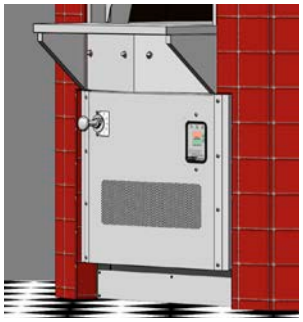

MORE INFORMATION

To see innovative design solutions created by other Wood Stone customers, visit the Photo Gallery on the Wood Stone website.

We recommend the following links for additional installation information:

- Wood Stone Facade Extensions
- Tools & Accessories – Hoods
- Custom Oven Finishes
- Unloading & Moving
- Installation Clearances
- Wood Stone Oven Venting
- Oven Venting Do's and Don'ts
- CAD and REVIT Libraries
- Installation and Operation Manuals

Option 3

Flat Wall with Extensions & Hood

Wood Stone

mountain series

This tutorial covers flat wall facade installations utilizing the optional Wood Stone Doorway Facade Extension Flat, Storage Box Extension Flat and Listed Type 1 Flat Face Exhaust Hood. Hood details can be found on the Wood Stone website in the Exhaust Hoods section.

Illustrations in this tutorial are representative of all MS models. However, there are some differences between models. Notable specific model differences include the absence of a Flame Height Control Knob on ovens without a radiant flame (WS-MS-W and WS-MS-W-IR models). The WS-MS-4 model has a flat face above the doorway, and if equipped with an IR burner, does not support Storage Box Extensions due to space limitations.

THE BASE OVEN

The graphic to the right shows the WS-MS-5-RFG-IR oven as it would arrive—with an optional Doorway Facade Extension Flat already installed. Specification Sheets, CAD symbols and Revit Libraries for all Mountain Series ovens can be found in the Downloads section on the Wood Stone website.

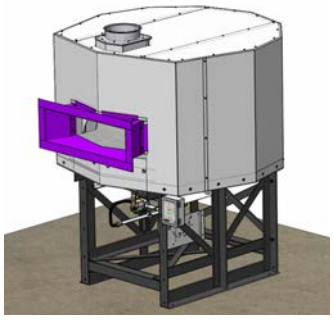

Step 1. INSTALL STORAGE BOX EXTENSION

Install the Storage Box Extension, which is shipped unmounted, per the instructions in the Installation and Operation Manual.

The Storage Box Extension will have been pre-aligned with the Doorway Extension at the factory and then removed prior to shipping.

Note: Upper and lower extensions should be ordered with the oven so they can be pre-aligned at the factory.

Air flows to the burners under the oven through the perforations on the upper sides of the Storage Box Extension. This area must be free of obstructions to allow proper airflow. The burners will not operate without sufficient combustion air. See Airflow Detail below.

To avoid common installation mistakes that affect airflow, see the Oven Venting Do's and Don'ts section of the Wood Stone website.

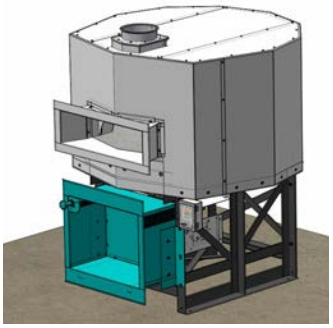

DETAIL > AIRFLOW DETAIL

Air flows to the burners under the oven through the perforations on the upper sides of the Storage Box Extension.

This area must be free of obstructions to allow proper airflow. The burners in the gas oven will not operate without sufficient combustion air. To avoid common installation mistakes that affect airflow, see the Oven Venting Do's and Don'ts section of the Wood Stone website.

Flat Wall with Extensions & Hood

Step 2. MOUNT THE HOOD

This tutorial assumes hood venting utilizing a Listed Type 1 Flat Face Exhaust Hood specifically designed for Wood Stone ovens. Mount the hood to the oven using the mounting flanges. See Hood Mounting Detail below.

Submit your plans for installation and ventilation to your local authority having jurisdiction before proceeding.

Mountain Series ovens have the option to be direct connected to a power-ventilated, grease-rated chimney, or vented with a Listed Type 1 Exhaust Hood, or one constructed in accordance with NFPA 96 and all relevant local and national codes. See the Oven Venting section of the Wood Stone website for more detail.

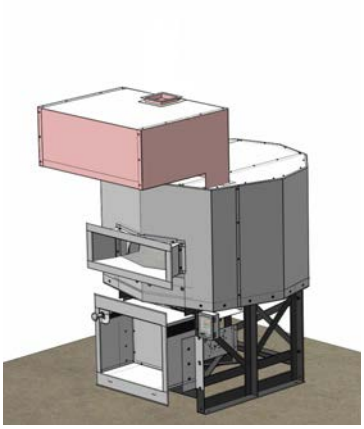

DETAIL > HOOD MOUNTING

To mount Wood Stone hood, determine the center line of the hood and place it on the oven in line with the center line of the oven "A". Mount hood as far forward on oven as possible—place the hood so the front edge of lower notch is even with the front of the oven "B". Attach hood to oven top by fastening flange with self-tapping screws "C".

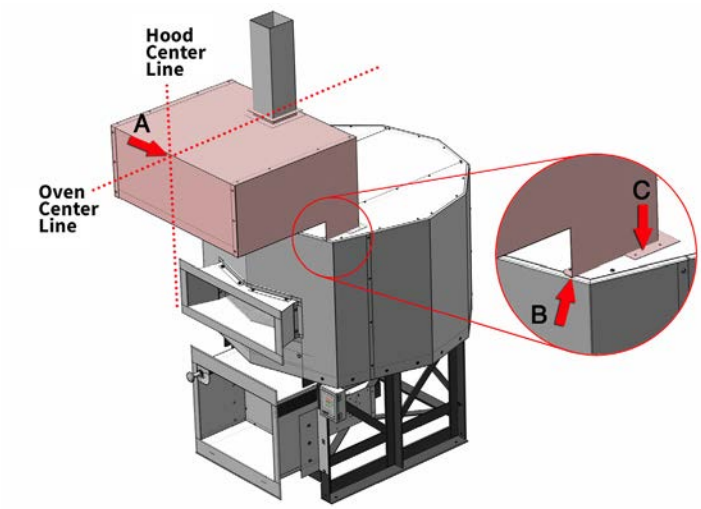

Step 3. BUILD STUD WALL

The stud wall is shown in green. Metal studs are recommended. Around the doorway area, metal studs are required. Maintain a 1-inch clearance from the oven to combustible materials. Do not pack this airspace with insulation or any other material. A zero-inch clearance from the oven to non-combustible materials is allowed. However, the respective clearances to combustibles are transferred to those non-combustibles.

Building materials 6 inches to either side and above the doorway must be non-combustible. See Clearances Detail on next page.

It is necessary to fabricate a sheet metal trim piece (shown in red at right) to span the gap between the wall to the top of the oven, preventing grease from dripping down from the hood into the space between the oven and facade wall. See Trim Detail on next page.

The hood must overhang beyond the exterior of the facade wall in accordance with its Listing. Specific overhang requirements can be found on the hood data plate. Without sufficient clearance, the filters will be impossible to remove and clean. Adequate clearance is required. See Filter Removal Detail on next page.

Gaylord hoods made specifically for Wood Stone ovens are Listed with a minumum overhang (clearance) of 8 inches. However, when installed in accordance with these instructions, the overhang will be greater than 8 inches (depending on the wall thickness). Note that extra space beyond the minimum requirement will make cleaning and service easier.

Tip: While the ductwork is generally installed during this phase, do not fully enclose until the construction has been inspected and approved by the local authority having jurisdiction.

The Storage Box Extension must be left accessible and unobstructed and removable after installation for air intake and routine service of the oven burner. See Storage Box Extension Detail on next page.

The oven controller comes mounted to the leg of the oven when a Storage Box Extension is ordered. The controller can optionally be mounted in a different position, i.e. in the wall next to the oven. When specified at the time of order, the controller is shipped with a longer wire harness to allow for custom placement. When mounting in the wall, make sure the front face of the controller protrudes approximately 3/4 inches beyond the finished wall surface to allow the controller box to be opened for service if necessary.

ALTERNATE VIEWS

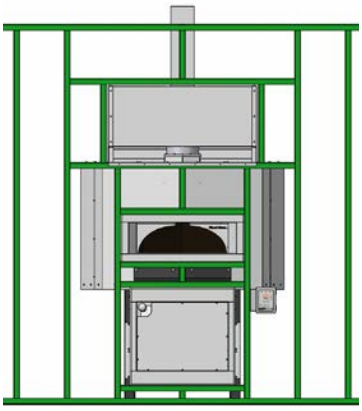

FRONT ELEVATION

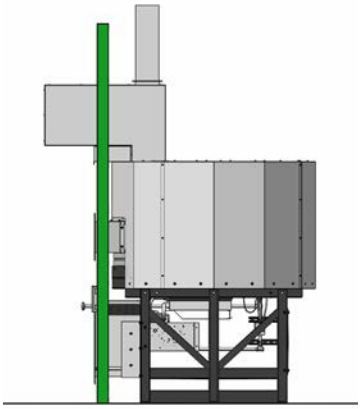

SIDE ELEVATION

Option
3

Flat Wall with Extensions & Hood

DETAIL > CLEARANCES

A major cause of oven-related fires is a failure to maintain required clearances to combustible material. Required clearances for Mountain Series ovens are defined as follows:

A. Provide 1-inch side clearance to combustible building materials. Do not pack this airspace with insulation or any other material.

B. Provide a non-combustible floor surface AND for ovens utilizing solid fuel, a non-combustible floor surface covering at least 30" to each side, and 36" in front of the door opening.

C. Provide 6" top clearance to combustible building materials.

D. Any facade materials 6 inches to either side of the doorway and above must be of non-combustible construction with no exceptions.

Note: A zero-inch clearance to non-combustible construction is allowed. However, the respective clearances to combustibles are transferred to these non-combustibles.

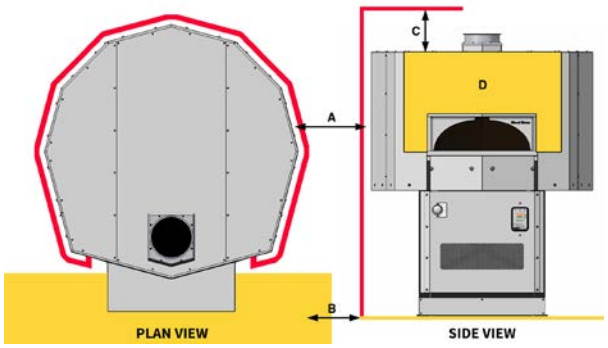

DETAIL > FILTER REMOVAL

Proper cleaning of the hood filters is required, so adequate clearance for filter removal must be maintained. Refer to hood specifications for minimum overhang required. Typically, the required clearance “A” is 8 inches.

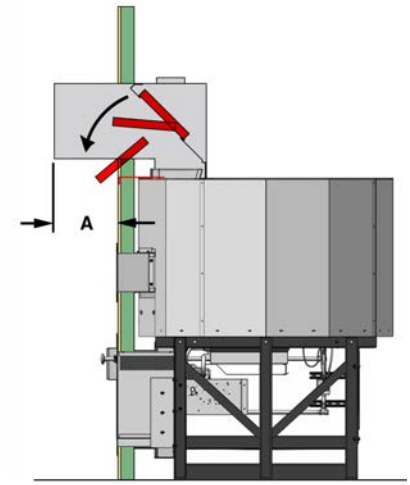

DETAIL > STORAGE BOX EXTENSION

When the facade is complete, the Storage Box Facade Extension must remain removable. “A” represents the unobstructed path of the panel for removal. “B” represents the width necessary to keep that path clear.

Any facade or enclosure below the mantle of gas-fired or combination ovens must allow for (1) unobstructed access for removal of service/ intake panel or storage box, (2) easy access to all controls and (3) sufficient combustion air for gas burners.

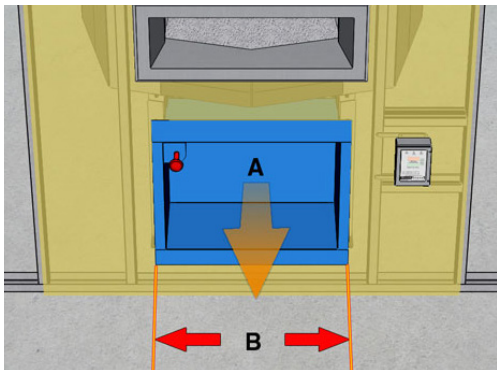

DETAIL > TRIM

It is necessary to fabricate a sheet metal trim piece (shown in red) to span the gap between the wall to the top of the oven, preventing grease from dripping down from the hood into the space between the oven and facade wall.

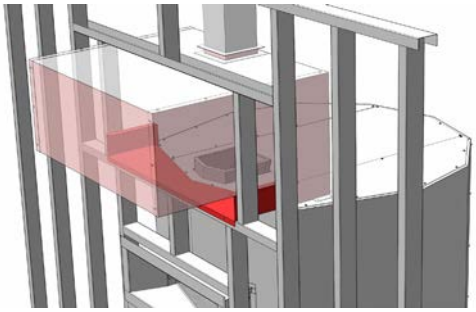

Flat Wall with Extensions & Hood

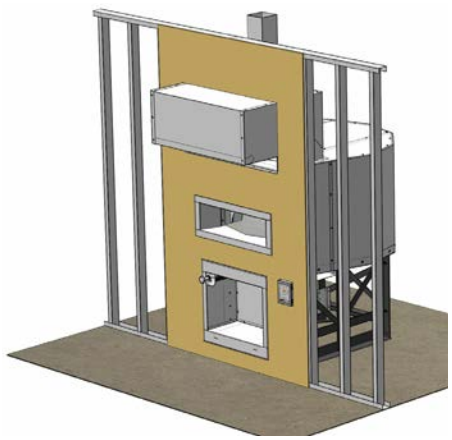

Step 4. INSTALL NON-COMBUSTIBLE UNDERLAYMENT

The material shown in beige is non-combustible cement board. Non-combustible material is required 6 inches to either side and above the oven doorway.

Non-combustible material is required anywhere the facade touches the doorway or mantle. In this example, non-combustible cement board is used as the underlayment to surround the hood, storage box and doorway. Drywall or Sheetrock are considered a combustible and must not be used.

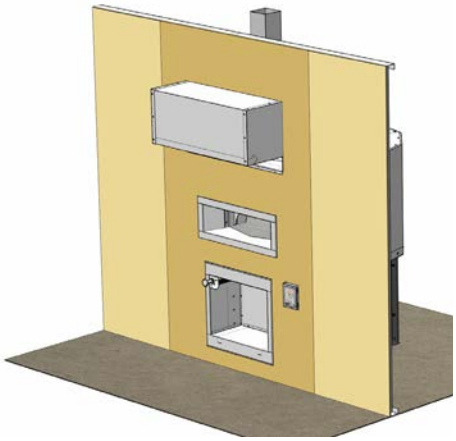

Step 5. INSTALL ADDITIONAL UNDERLAYMENT

Drywall (shown in yellow in the graphic to the right) is installed on the stud wall. While building materials more than 1 inch away from the oven do not need to be non-combustible, many installers choose to make the entire wall out of the non-combustible cement board to simplify construction and create a consistent facade underlayment.

Flat Wall with Extensions & Hood

Step 6. ADD FACADE MATERIAL

The facade wall can be finished with any non-combustible decorative material that can be easily affixed to the wall surface such as tile, stone or brick. It is always advisable to consult with the appropriate authority having jurisdiction before proceeding as there may be regulations regarding the suitability of various materials. Temperatures above the oven doorway can reach 200 °F. Select materials and adhesives suitable for this temperature.

It is necessary for the proper operation of our ovens that the Flame Height Control Knob be fully accessible after all finishing is completed. This knob controls temperature in our gas ovens. See Flame Height Control Knob Detail below.

An optional Flame Height Control Knob Extension Kit is available to extend the length of the shaft in order to accommodate any facade depth, although this is not necessary when using Facade Extensions available from Wood Stone.

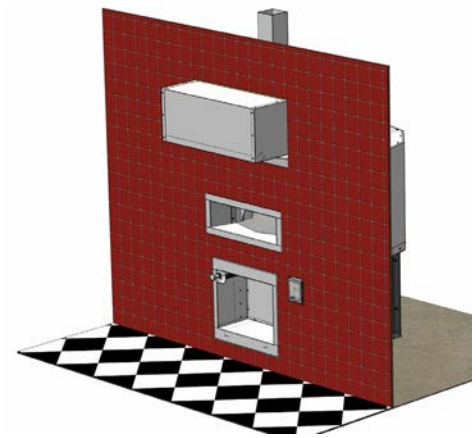

DETAIL > FLAME HEIGHT CONTROL KNOB

The Flame Height Control Knob adjusts the height of the radiant flame inside the oven. It is required to operate the oven and must be fully accessible after all finishing is completed.

An optional Flame Height Control Knob Extension Kit is available to extend the length of the shaft in order to accommodate any facade depth, although this is not necessary when using Facade Extensions available from Wood Stone.

MORE INFORMATION

To see innovative design solutions created by other Wood Stone customers, visit the Photo Gallery on the Wood Stone website.

We recommend the following links for additional installation information:

- Wood Stone Facade Extensions
- Tools & Accessories – Hoods
- Custom Oven Finishes
- Unloading & Moving
- Installation Clearances
- Wood Stone Oven Venting
- Oven Venting Do's and Don'ts
- CAD and REVIT Libraries
- Installation and Operation Manuals

Option 4

Flat Wall with Extensions & Hood Soffit

Wood Stone

mountain series

This tutorial covers flat wall facade installations with a hood soffit, utilizing the optional Wood Stone Doorway Facade Extension Flat, Storage Box Extension Flat and Listed Type 1 Flat Face Exhaust Hood. Hood details can be found on the Wood Stone website in the Exhaust Hoods section.

Illustrations in this tutorial are representative of all MS models. However, there are some differences between models. Notable specific model differences include the absence of a Flame Height Control Knob on ovens without a radiant flame (WS-MS-W and WS-MS-W-IR models). The WS-MS-4 model has a flat face above the doorway, and if equipped with an IR burner, does not support Storage Box Extensions due to space limitations.

THE BASE OVEN

The graphic to the right shows the WS-MS-5-RFG-IR oven as it would arrive—with the optional Doorway Facade Extension Flat already installed. Specification Sheets, CAD symbols and Revit Libraries for all Mountain Series ovens can be found in the Downloads section on the Wood Stone website.

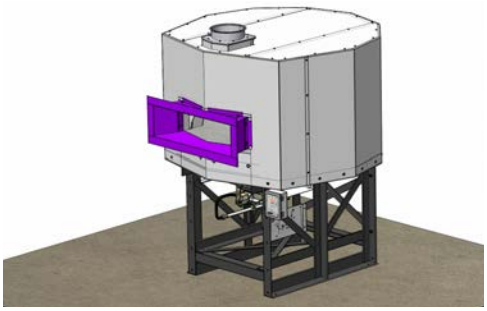

Step 1. INSTALL STORAGE BOX EXTENSION

Mount the Storage Box Extension, which is shipped uninstalled, per the instructions in the Installation and Operation Manual.

The Storage Box Facade Extension will have been pre-aligned with the Doorway Facade Extension at the factory and then removed for shipping.
Note: Upper and lower extensions should be ordered with the oven so they can be pre-aligned at the factory.

Air flows to the burners under the oven through the perforations on the upper sides of the Storage Box Extension. This area must be free of obstructions to allow proper airflow. The burners will not operate without sufficient combustion air. See Airflow Detail below.

To avoid common installation mistakes that affect airflow, see the Oven Venting Do's and Don'ts section on the Wood Stone website.

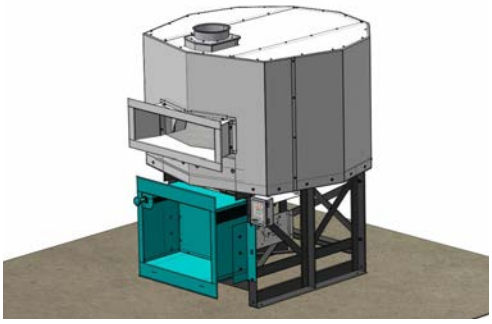

DETAIL > AIRFLOW

Air flows to the burners under the oven through the perforations on the upper sides of the Storage Box Extension.

This area must be free of obstructions to allow proper airflow. The burners in the gas oven will not operate without sufficient combustion air. To avoid common installation mistakes that affect airflow, see the Oven Venting Do's and Don'ts section on the Wood Stone website.

Flat Wall with Extensions & Hood Soffit

Step 2. MOUNT THE HOOD

This tutorial assumes hood venting utilizing a Listed Type 1 Flat Face Exhaust Hood specifically designed for Wood Stone ovens. Mount the hood to the oven using the mounting flanges. See Hood Mounting Detail below.

Submit your plans for installation and ventilation to your local authority having jurisdiction before proceeding.

Mountain Series ovens have the option to be direct connected to a power-ventilated, grease-rated chimney, or vented with a Listed Type 1 Exhaust Hood, or one constructed in accordance with NFPA 96 and all relevant local and national codes. See the Oven Venting section of the Wood Stone website for more detail.

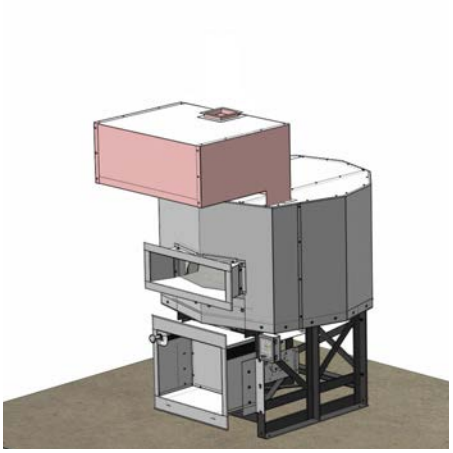

DETAIL > HOOD MOUNTING

To mount Wood Stone hood, determine the center line of the hood and place it on the oven in line with the center line of the oven "A". Mount hood as far forward on oven as possible—place the hood so the front edge of lower notch is even with the front of the oven "B". Attach hood to oven top by fastening flange with self-tapping screws "C".

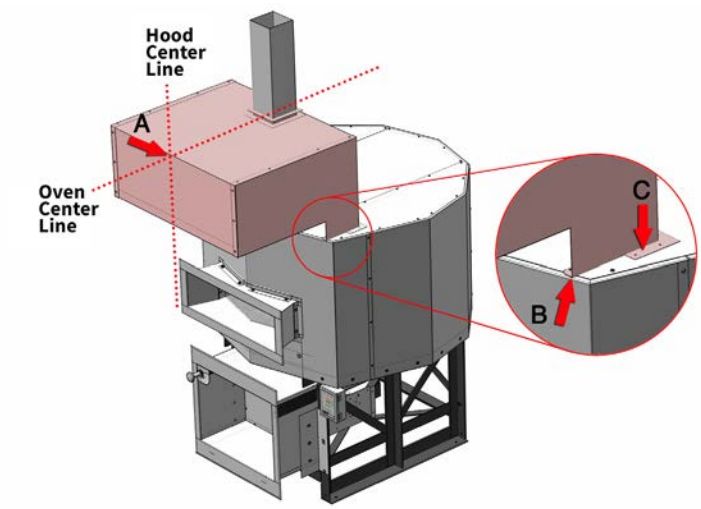

Flat Wall with Extensions & Hood Soffit

Step 3. BUILD STUD WALL

The stud wall is shown in green. Metal studs are recommended. Around the doorway area, metal studs are required. Maintain a 1-inch clearance from the oven to combustible materials. Do not pack this airspace with insulation or any other material. A zero-inch clearance from the oven to non-combustible materials is allowed. However, the respective clearances to combustibles are transferred to those non-combustibles.

Building materials 6 inches to either side and above the doorway must be non-combustible. See Clearances Detail on next page.

It is necessary to fabricate a sheet metal trim piece (shown in red) to span the gap between the wall to the top of the oven, preventing grease from dripping down from the hood into the space between the oven and facade wall. See Trim Detail on next page.

The hood must overhang beyond the exterior of the facade wall in accordance with its Listing. Specific overhang requirements can be found on the hood data plate. Without sufficient clearance, the filters will be impossible to remove and clean. Adequate clearance is required. See Filter Removal Detail on next page.

Gaylord hoods made specifically for Wood Stone ovens are Listed with a minumum overhang (clearance) of 8 inches. However, when installed in accordance with these instructions, the overhang will be greater than 8 inches (depending on the wall thickness). Note that extra space beyond the minimum requirement will make cleaning and service easier.

Tip: While the ductwork is generally installed during this phase, do not fully enclose until the construction has been inspected and approved by the local authority having jurisdiction.

The Storage Box Extension must be left accessible and unobstructed and removable after installation for air intake and routine service of the oven burner. See Storage Box Extension Detail on next page.

The oven controller comes mounted to the leg of the oven when a Storage Box Extension is ordered. The controller can optionally be mounted in a different position, i.e. in the wall next to the oven. When specified at the time of order, the controller is shipped with a longer wire harness to allow for custom placement. When mounting in the wall, make sure the front face of the controller protrudes approximately 3/4 inches beyond the finished wall surface to allow the box to be opened for service if necessary.

ALTERNATE VIEWS

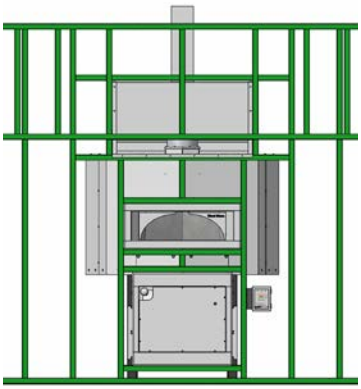

FRONT ELEVATION

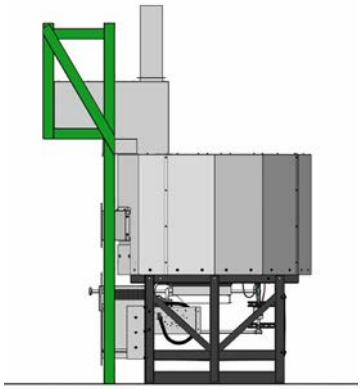

SIDE ELEVATION

Option
4

Flat Wall with Extensions & Hood Soffit

DETAIL > CLEARANCES

A major cause of oven-related fires is a failure to maintain required clearances to combustible material. Required clearances for Mountain Series ovens are defined as follows:

A. Provide 1-inch side clearance to combustible building materials. Do not pack this airspace with insulation or any other material.

B. Provide a non-combustible floor surface AND for ovens utilizing solid fuel, a non-combustible floor surface covering at least 30" to each side, and 36" in front of the door opening.

C. Provide 6" top clearance to combustible building materials.

D. Any facade materials 6 inches to either side of the doorway and above must be of non-combustible construction with no exceptions.

Note: A zero-inch clearance to non-combustible construction is allowed. However, the respective clearances to combustibles are transferred to these non-combustibles.

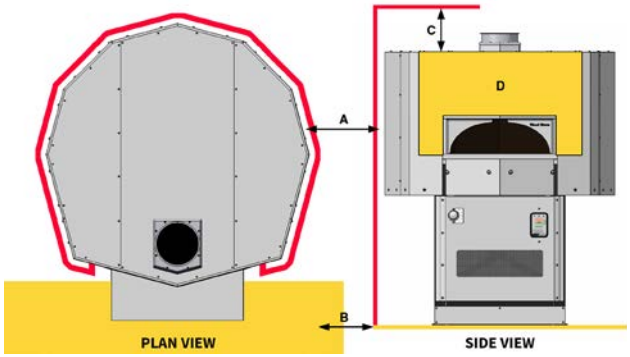

DETAIL > FILTER REMOVAL

Proper cleaning of the hood filters is required, so adequate clearance for filter removal must be maintained. Refer to hood specifications for minimum overhang required. Typically, the required clearance “A” is 8 inches.

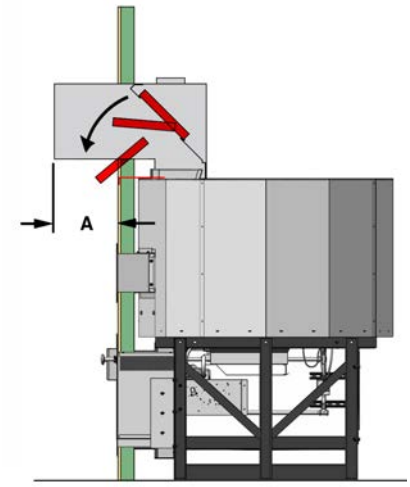

DETAIL > STORAGE BOX EXTENSION

When the facade is complete, the Storage Box Facade Extension must remain removable. “A” represents the unobstructed path of the panel for removal. “B” represents the width necessary to keep that path clear.

Any facade or enclosure below the mantle of gas-fired or combination ovens must allow for (1) unobstructed access for removal of service/ intake panel or storage box, (2) easy access to all controls and (3) sufficient combustion air for gas burners.

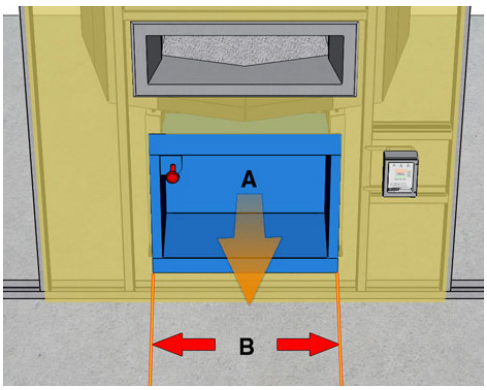

DETAIL > TRIM

It is necessary to to span the gap between the wall to the top of the oven, preventing grease from dripping down from the hood into the space between the oven and facade wall. This can be accomplished by fabricating a sheet metal trim piece on-site. Alternatively, the optional Wood Stone Hood Trim provides the spanning function as well as a flange which runs the full height of the hood to create an attractive finished edge.

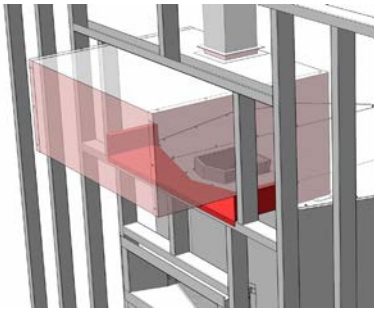

On-Site hood gap fabrication

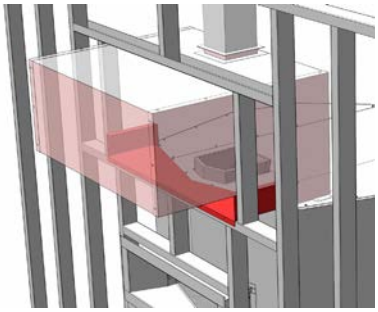

Wood Stone Hood Trim

Flat Wall with Extensions & Hood Soffit

Step 4. INSTALL NON-COMBUSTIBLE UNDERLAYMENT

The material shown in beige is non-combustible cement board. Non-combustible material is required 6 inches to either side and above the oven doorway.

Non-combustible material is required anywhere the facade touches the doorway or mantle. In this example, non-combustible cement board is used as the underlayment to surround the hood, storage box and doorway. Drywall and Sheetrock are considered a combustible and must not be used.

Step 5. INSTALL ADDITIONAL UNDERLAYMENT

Drywall (shown in yellow) is installed on the stud wall. While building materials more than 1 inch away from the oven do not need to be non-combustible, many installers choose to make the entire wall out of the non-combustible cement board to simplify construction and create a consistent facade underlayment.

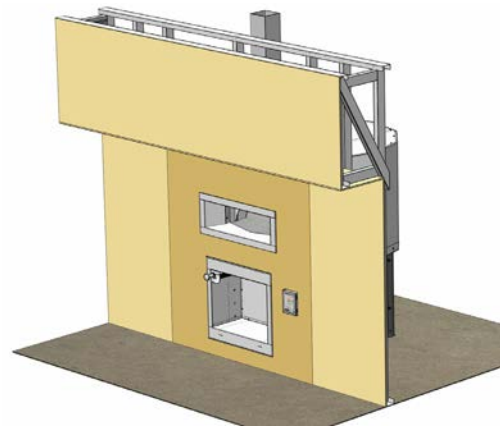

Option 4

Flat Wall with Extensions & Hood Soffit

Step 6. ADD FACADE MATERIAL

The facade wall can be finished with any non-combustible decorative material that can be easily affixed to the wall surface such as tile, stone or brick. It is always advisable to consult with the appropriate authority having jurisdiction before proceeding as there may be regulations regarding the suitability of various materials. Temperatures above the oven doorway can reach 200 °F. Select materials and adhesives suitable for this temperature.

It is necessary for the proper operation of Wood Stone ovens that the Flame Height Control Knob be fully accessible after all finishing is completed. This knob controls temperature in our gas ovens. See Flame Height Control Knob Detail below.

An optional Flame Height Control Knob Extension Kit is available to extend the length of the shaft in order to accommodate any facade depth, although this is not necessary when using Facade Extensions available from Wood Stone.

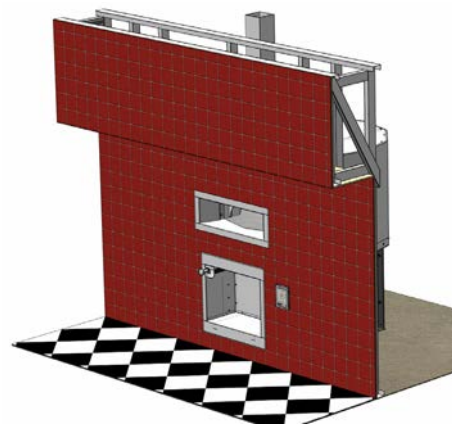

DETAIL > FLAME HEIGHT CONTROL KNOB

The Flame Height Control Knob adjusts the height of the radiant flame inside the oven. It is required to operate the oven and must be fully accessible after all finishing is completed.

An optional Flame Height Control Knob Extension Kit is available to extend the length of the shaft in order to accommodate any facade depth, although this is not necessary when using Facade Extensions available from Wood Stone.

MORE INFORMATION

To see innovative design solutions created by other Wood Stone customers, visit the Photo Gallery on the Wood Stone website.

We recommend the following links for additional installation information:

- Wood Stone Facade Extensions
- Tools & Accessories – Hoods
- Custom Oven Finishes
- Unloading & Moving
- Installation Clearances
- Wood Stone Oven Venting
- Oven Venting Do's and Don'ts
- CAD and REVIT Libraries
- Installation and Operation Manuals

Option 5

Cylinder Wall (Silo)

Wood Stone

mountain series

This tutorial covers cylindrical (silo) facade installations, utilizing the optional Wood Stone Doorway Facade Extension Curved – Small Radius and Service Panel Extension Curved – Small Radius. The oven is vented via the direct connect venting method.

Illustrations in this tutorial are representative of all MS models. However, there are some differences between models. Notable specific model differences include the absence of a Flame Height Control Knob on ovens without a radiant flame (WS-MS-W and WS-MS-W-IR models). The WS-MS-4 model has a flat face above the doorway, and if equipped with an IR burner, does not support Storage Box Extensions due to space limitations.

THE BASE OVEN

The graphic to the right shows the WS-MS-5-RFG-IR oven as it would arrive—with an optional Doorway Facade Extension Curved – Small Radius already installed. Specification Sheets, CAD symbols and Revit Libraries for all Mountain Series ovens can be found in the Downloads section on the Wood Stone website.

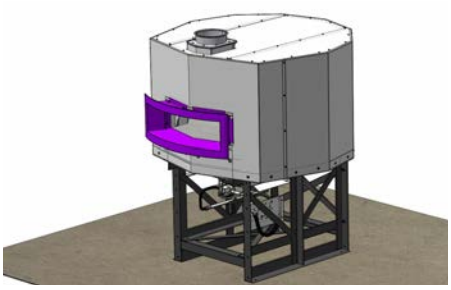

Step 1.

INSTALL SERVICE PANEL FACADE EXTENSION CURVED

Mount the Service Panel Extension Curved – Small Radius, which is shipped uninstalled, per the instructions in the Installation and Operation Manual.

The Service Panel Extension will have been pre-aligned with the Doorway Extension at the factory and then removed for shipping.

Note: Upper and lower extensions should be ordered with the oven so they can be pre-aligned at the factory.

Note the perforated section in the lower section of the inner panel. This area allows airflow to the burners under the oven. It is mandatory that airflow not be blocked. Inadequate combustion air will impact the performance of the oven. See Airflow Detail below.

To avoid common installation mistakes that affect airflow, see the Oven Venting Do's and Don'ts section on the Wood Stone website.

Connect the flue to the oven's flue collar. This flue must be a grease-rated duct. If the oven is being completely enclosed, make certain the duct system has been approved by the authority having jurisdiction before covering. See the Oven Venting section on the Wood Stone website for more details.

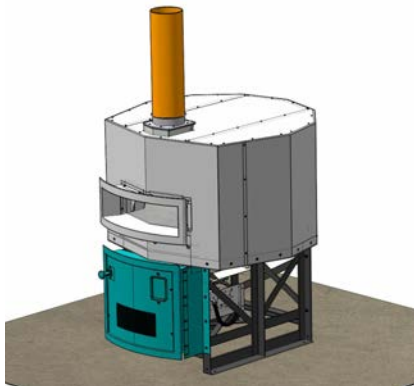

DETAIL > AIRFLOW DETAIL

Air flows through the space under the oven through the perforated air intake on the front of the Service Panel.

This area must be free of obstructions to allow proper airflow. The burners in the gas oven will not operate without sufficient combustion air. To avoid common installation mistakes that affect airflow, see the Oven Venting Do's and Don'ts section on the Wood Stone website.

Step 2. BUILD STUD WALL

The stud wall is shown in green. Metal studs are recommended. Around the doorway area, metal studs are required. Maintain a 1-inch clearance from the oven to combustible materials. Do not pack this airspace with insulation or any other material. A zero-inch clearance from the oven to non-combustible materials is allowed. However, the respective clearances to combustibles are transferred to those non-combustibles.

Building materials 6 inches to either side and above the doorway must be non-combustible. See Clearances Detail below.

The Service Panel must be left accessible and unobstructed after installation for air intake and routine service of the oven burner. See Service Panel Extension Detail below.

The oven controller is mounted in the Service Panel. The controller can optionally be mounted in a different position, i.e. in the wall next to the oven. When specified at the time of order, the controller is shipped with a longer wire harness to allow for custom placement, and the Service Panel doesn't have the knockout for the controller. When mounting in the wall, make sure the front face of the controller protrudes approximately 3/4 inches beyond the finished wall surface to allow the controller box to be opened for service if necessary.

DETAIL > CLEARANCES

A major cause of oven-related fires is a failure to maintain required clearances to combustible material. Required clearances for Mountain Series ovens are defined as follows:

A. Provide 1-inch side clearance to combustible building materials. Do not pack this airspace with insulation or any other material.

B. Provide a non-combustible floor surface AND for ovens utilizing solid fuel, a non-combustible floor surface covering at least 30" to each side, and 36" in front of the door opening.

C. Provide 6" top clearance to combustible building materials.

D. Any facade materials 6 inches to either side of the doorway and above must be of non-combustible construction with no exceptions.

Note: A zero-inch clearance to non-combustible construction is allowed. However, the respective clearances to combustibles are transferred to these non-combustibles.

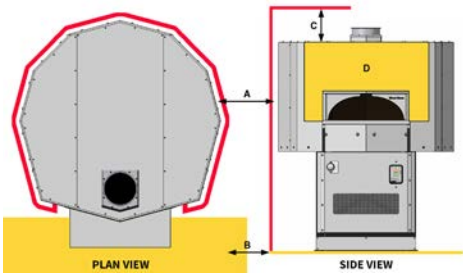

DETAIL > SERVICE PANEL EXTENSION

When the facade is complete, the Service Panel must remain removable. "A" represents the unobstructed path of the panel for removal. "B" represents the width necessary to keep that path clear after the installation of all building and facade materials.

Any facade or enclosure below the mantle of gas-fired or combination ovens must allow for (1) unobstructed access for removal of service/intake panel or storage box, (2) easy access to all controls and (3) sufficient combustion air for gas burners.

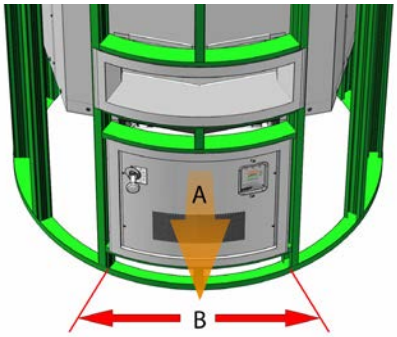

Cylinder Wall (Silo)

Step 3. INSTALL NON-COMBUSTIBLE UNDERLAYMENT

The material shown in beige is non-combustible cement board. Non-combustible material is required 6 inches to either side and above the oven doorway.

Non-combustible material is required anywhere the facade touches the doorway or mantle. Generally, non-combustible cement board is used as the underlayment material to surround the doorway and Service Panel. Drywall and Sheetrock are considered a combustible and must not be used.

Step 4. INSTALL ADDITIONAL UNDERLAYMENT

Drywall (shown in yellow) is installed on the stud wall. While building materials more than 1 inch away from the oven do not need to be non-combustible, many installers choose to make the entire wall out of the non-combustible cement board to simplify construction and create a consistent facade underlayment.

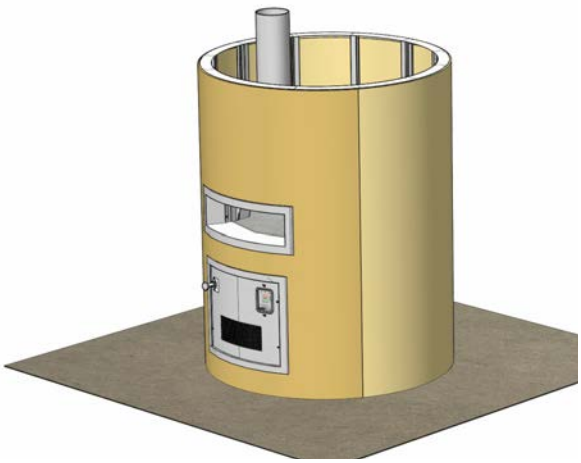

Cylinder Wall (Silo)

Step 5. ADD FACADE MATERIAL

The facade wall can be finished with any non-combustible decorative material that can be easily affixed to the wall surface such as tile, stone or brick. It is always advisable to consult with the appropriate authority having jurisdiction before proceeding as there may be regulations regarding the suitability of various materials. Temperatures above the oven doorway can reach 200 °F. Select materials and adhesives suitable for this temperature.

It is necessary for the proper operation of our ovens that the Flame Height Control Knob be fully accessible after all finishing is completed. This knob controls temperature in our gas ovens. See Flame Height Control Knob Detail below.

An optional Flame Height Control Knob Extension Kit is available to extend the length of the shaft in order to accommodate any facade depth, although this is not necessary when using Facade Extensions available from Wood Stone.

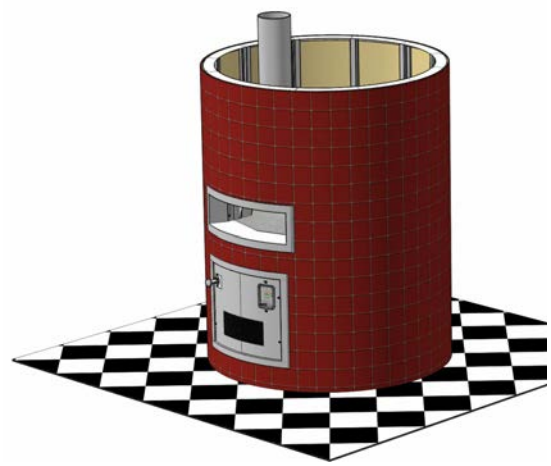

DETAIL > FLAME HEIGHT CONTROL KNOB

The Flame Height Control Knob adjusts the height of the radiant flame inside the oven. It is required to operate the oven and must be fully accessible after all finishing is completed.

An optional Flame Height Control Knob Extension Kit is available to extend the length of the shaft in order to accommodate any facade depth, although this is not necessary when using Facade Extensions available from Wood Stone.

MORE INFORMATION

To see innovative design solutions created by other Wood Stone customers, visit the Photo Gallery on the Wood Stone website.

We recommend the following links for additional installation information:

- Wood Stone Facade Extensions
- Tools & Accessories – Hoods
- Custom Oven Finishes
- Unloading & Moving
- Installation Clearances
- Wood Stone Oven Venting
- Oven Venting Do's and Don'ts
- CAD and REVIT Libraries
- Installation and Operation Manuals

Option 6

Large Radius Wall with Extensions & Hood

Wood Stone

mountain series

This tutorial covers large radius corner wall facade installation utilizing the optional Wood Stone Doorway Facade Extension Curved – Large Radius, Storage Box Extension Curved – Large Radius and a Curved Face Listed Type 1 Exhaust Hood. Hood details can be found on the Wood Stone website in the Exhaust Hoods section.

Illustrations in this tutorial are representative of all MS models. However, there are some differences between models. Notable specific model differences include the absence of a Flame Height Control Knob on ovens without a radiant flame (WS-MS-W and WS-MS-W-IR models). The WS-MS-4 model has a flat face above the doorway, and if equipped with an IR burner, does not support Storage Box Extensions due to space limitations.

THE BASE OVEN

The graphic to the left shows the WS-MS-5-RFG-IR oven as it would arrive—with the optional Doorway Facade Extension Curved already installed. Specification Sheets, CAD symbols and Revit Libraries for all Mountain Series ovens can be found in the Downloads section on the Wood Stone website.

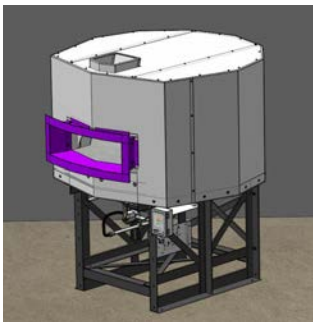

Step 1.

INSTALL SERVICE PANEL FACADE EXTENSION CURVED

Mount the Storage Box Extension, which is shipped uninstalled, per the instructions in the Installation and Operation Manual.

The Storage Box Extension will have been pre-aligned with the Doorway Extension at the factory and then removed prior to shipping.

Note: Upper and lower extensions should be ordered with the oven so they can be pre-aligned at the factory.

Air flows to the burners under the oven through the perforations on the upper sides of the Storage Box Extension. This area must be free of obstructions to allow proper airflow. The burners will not operate without sufficient combustion air. See Airflow Detail below.

To avoid common installation mistakes that affect airflow, see the Oven Venting Do's and Don'ts section on the Wood Stone website.

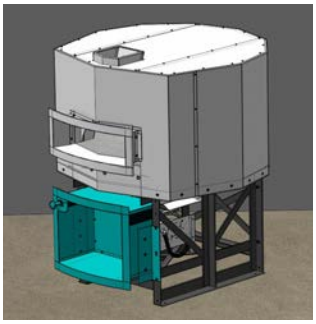

DETAIL > AIRFLOW DETAIL

Air flows to the burners under the oven through the perforations on the upper sides of the Storage Box Extension.

This area must be free of obstructions to allow proper airflow. The burners in the gas oven will not operate without sufficient combustion air. To avoid common installation mistakes that affect airflow, see the Oven Venting Do's and Don'ts section on the Wood Stone website.

Large Radius Wall with Extensions & Hood

Step 2. MOUNT THE HOOD

This tutorial assumes hood venting utilizing a Listed Type 1 Flat Face Exhaust Hood specifically designed for Wood Stone ovens. Mount the hood to the oven using the mounting flanges. See Hood Mounting Detail below.

Submit your plans for installation and ventilation to your local authority having jurisdiction before proceeding.

Mountain Series ovens have the option to be direct connected to a power-ventilated, grease-rated chimney, or vented with a Listed Type 1 Exhaust Hood, or one constructed in accordance with NFPA 96 and all relevant local and national codes. See the Oven Venting section of the Wood Stone website for more detail.

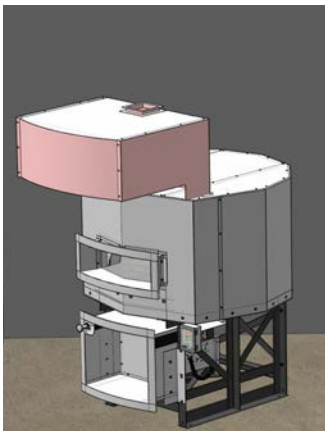

DETAIL > HOOD MOUNTING

To mount Wood Stone hood, determine the center line of the hood and place it on the oven in line with the center line of the oven "A". Mount hood as far forward on oven as possible—place the hood so the front edge of lower notch is even with the front of the oven "B". Attach hood to oven top by fastening flange with self-tapping screws "C".

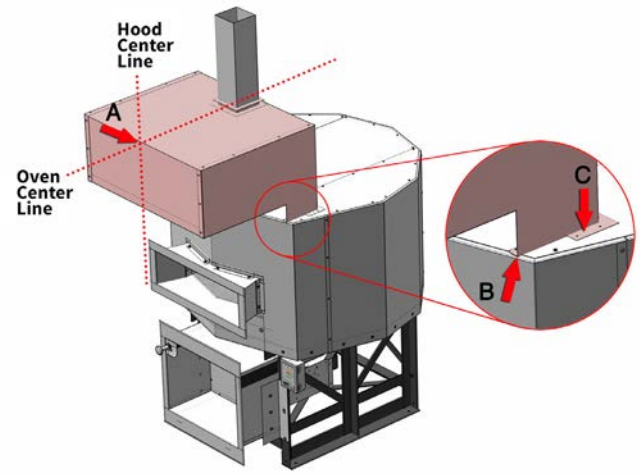

Large Radius Wall with Extensions & Hood

Step 3. BUILD STUD WALL

The stud wall is shown in green. Metal studs are recommended. Around the doorway area, metal studs are required. Maintain a 1-inch clearance from the oven to combustible materials. Do not pack this airspace with insulation or any other material. A zero-inch clearance from the oven to non-combustible materials is allowed. However, the respective clearances to combustibles are transferred to those non-combustibles.

Building materials 6 inches to either side and above the doorway must be non-combustible. See Clearances Detail on next page.

It is necessary to fabricate a sheet metal trim piece (shown in red) to span the gap between the wall to the top of the oven, preventing grease from dripping down from the hood into the space between the oven and facade wall. See Trim Detail on next page.

The hood must overhang beyond the exterior of the facade wall in accordance with its Listing. Specific overhang requirements can be found on the hood data plate. Without sufficient clearance, the filters will be impossible to remove and clean. Adequate clearance is required. See Filter Removal Detail on next page.

Gaylord hoods made specifically for Wood Stone ovens are Listed with a minumum overhang (clearance) of 8 inches. However, when installed in accordance with these instructions, the overhang will be greater than 8 inches (depending on the wall thickness). Note that extra space beyond the minimum requirement will make cleaning and service easier.

Tip: While the ductwork is generally installed during this phase, do not fully enclose until the construction has been inspected and approved by the local authority having jurisdiction.

The Storage Box Extension must be left accessible and unobstructed and removable after installation for air intake and routine service of the oven burner. See Storage Box Extension Detail on next page.

The oven controller comes mounted to the leg of the oven when a Storage Box Extension is ordered. The controller can optionally be mounted in a different position, i.e. in the wall next to the oven. When specified at the time of order, the controller is shipped with a longer wire harness to allow for custom placement. When mounting in the wall, make sure the front face of the controller protrudes approximately 3/4 inches beyond the finished wall surface to allow the box to be opened for service if necessary.

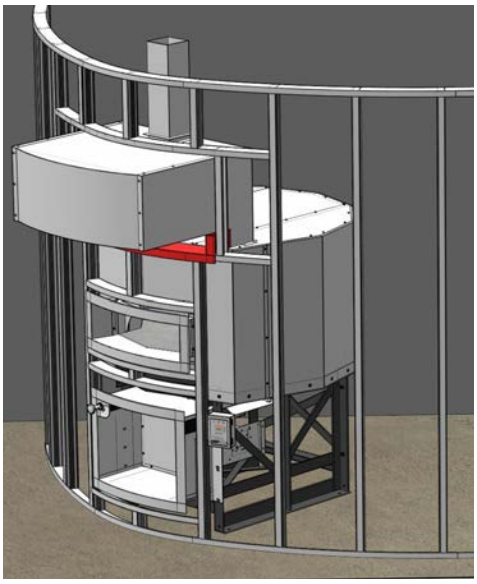

Option
6

Large Radius Wall with Extensions & Hood

DETAIL > CLEARANCES

A major cause of oven-related fires is a failure to maintain required clearances to combustible material. Required clearances for Mountain Series ovens are defined as follows:

A. Provide 1-inch side clearance to combustible building materials. Do not pack this airspace with insulation or any other material.

B. Provide a non-combustible floor surface AND for ovens utilizing solid fuel, a non-combustible floor surface covering at least 30" to each side, and 36" in front of the door opening.

C. Provide 6" top clearance to combustible building materials.

D. Any facade materials 6 inches to either side of the doorway and above must be of non-combustible construction with no exceptions.

Note: A zero-inch clearance to non-combustible construction is allowed. However, the respective clearances to combustibles are transferred to these non-combustibles.

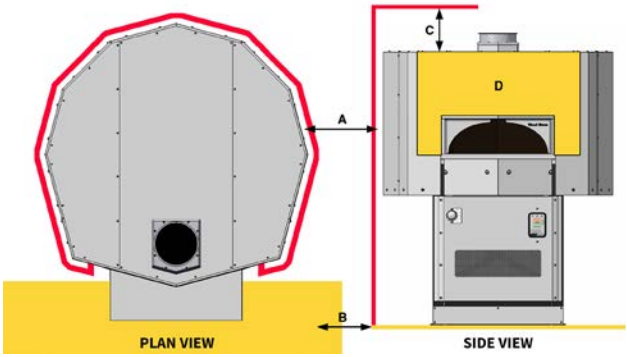

DETAIL > FILTER REMOVAL

Proper cleaning of the hood filters is required, so adequate clearance for filter removal must be maintained. Refer to hood specifications for minimum overhang required. Typically, the required clearance “A” is 8 inches.

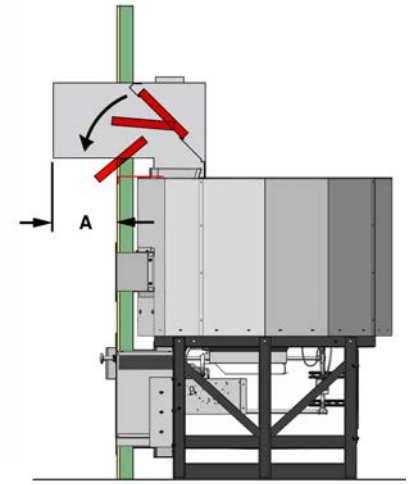

DETAIL > STORAGE BOX EXTENSION

When the facade is complete, the Storage Box Facade Extension must remain removable. “A” represents the unobstructed path of the panel for removal. “B” represents the width necessary to keep that path clear.

Any facade or enclosure below the mantle of gas-fired or combination ovens must allow for (1) unobstructed access for removal of service/ intake panel or storage box, (2) easy access to all controls and (3) sufficient combustion air for gas burners.

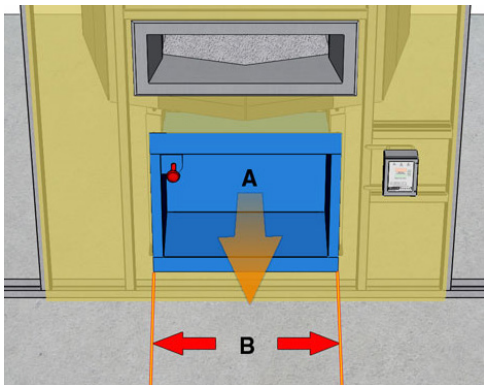

DETAIL > TRIM

It is necessary to fabricate a sheet metal trim piece (shown in red) to span the gap between the wall to the top of the oven, preventing grease from dripping down from the hood into the space between the oven and facade wall.

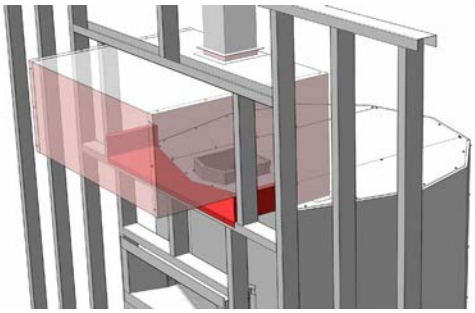

Large Radius Wall with Extensions & Hood

Step 4. INSTALL NON-COMBUSTIBLE UNDERLAYMENT

The material shown in beige is non-combustible cement board. Non-combustible material is required 6 inches to either side and above the oven doorway.

Non-combustible material is required anywhere the facade touches the doorway or mantle. Generally, non-combustible cement board is used as the underlayment material to surround the hood, storage box and doorway. Drywall and Sheetrock are considered a combustible and must not be used.

Step 5. INSTALL ADDITIONAL UNDERLAYMENT

Drywall (shown in yellow) is installed on the stud wall. While building materials more than 1 inch away from the oven do not need to be non-combustible, many installers choose to make the entire wall out of the non-combustible cement board to simplify construction and create a consistent facade underlayment.

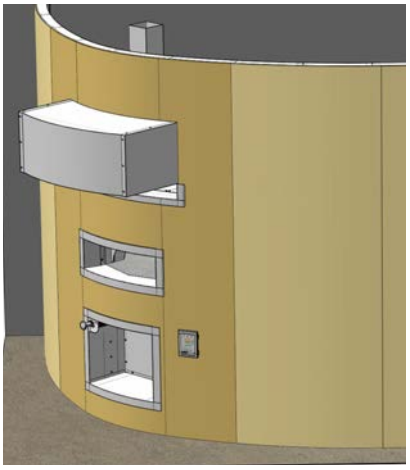

Large Radius Wall with Extensions & Hood

Step 6. ADD FACADE MATERIAL

The facade wall can be finished with any non-combustible decorative material that can be easily affixed to the wall surface such as tile, stone or brick. It is always advisable to consult with the appropriate authority having jurisdiction before proceeding as there may be regulations regarding the suitability of various materials. Temperatures above the oven doorway can reach 200 °F. Select materials and adhesives suitable for this temperature.

It is necessary for the proper operation of our ovens that the Flame Height Control Knob be fully accessible after all finishing is completed. This knob controls temperature in our gas ovens. See Flame Height Control Knob Detail below.

An optional Flame Height Control Knob Extension Kit is available to extend the length of the shaft in order to accommodate any facade depth, although this is not necessary when using Facade Extensions available from Wood Stone.

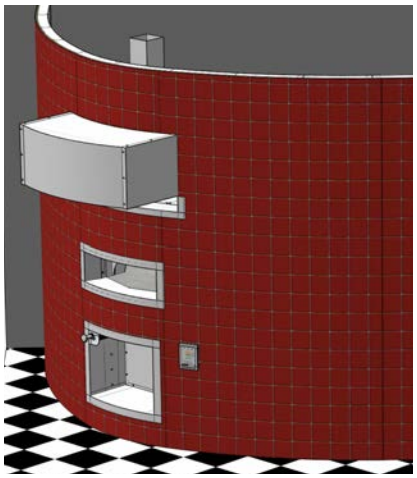

DETAIL > FLAME HEIGHT CONTROL KNOB

The Flame Height Control Knob adjusts the height of the radiant flame inside the oven. It is required to operate the oven and must be fully accessible after all finishing is completed.

An optional Flame Height Control Knob Extension Kit is available to extend the length of the shaft in order to accommodate any facade depth, although this is not necessary when using Facade Extensions available from Wood Stone.

MORE INFORMATION

To see innovative design solutions created by other Wood Stone customers, visit the Photo Gallery on the Wood Stone website.

We recommend the following links for additional installation information:

- Wood Stone Facade Extensions
- Tools & Accessories – Hoods
- Custom Oven Finishes
- Unloading & Moving
- Installation Clearances
- Wood Stone Oven Venting
- Oven Venting Do's and Don'ts
- CAD and REVIT Libraries
- Installation and Operation Manuals

Option 7

Flat Wall, Arched Doorway & Service Panel Extension

Wood Stone

mountain series

This tutorial covers flat wall facade installations utilizing the optional Wood Stone Doorway Facade Extension Arched. The oven is vented via the direct connect venting method.

Illustrations in this tutorial are representative of all MS models. However, there are some differences between models. Notable specific model differences include the absence of a Flame Height Control Knob on ovens without a radiant flame (WS-MS-W and WS-MS-W-IR models). The WS-MS-4 model has a flat face above the doorway, and if equipped with an IR burner, does not support Storage Box Extensions due to space limitations.

THE BASE OVEN

The graphic to the left shows the WS-MS-5-RFG-IR oven as it would arrive—with an optional Doorway Facade Extension Arched already installed. Specification Sheets, CAD symbols and Revit Libraries for all Mountain Series ovens can be found in the Downloads section on the Wood Stone website.

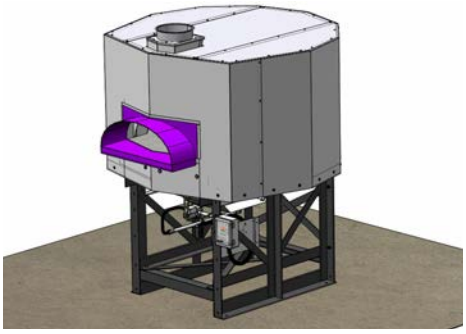

Step 1. INSTALL SUPPLIED OVEN COMPONENTS

Mount the Service Panel Extension, which is shipped uninstalled, per the instructions in the Installation and Operation Manual.

The Service Panel Extension will have been pre-aligned with the Doorway Extension at the factory and then removed prior to shipping.

Note: Upper and lower extensions should be ordered with the oven so they can be pre-aligned at the factory.

Note the perforated section in the lower section of the inner panel. This area allows airflow to the burners under the oven. It is mandatory that airflow not be blocked. Inadequate combustion air will impact the performance of the oven. See Airflow Detail below.

To avoid common installation mistakes that affect airflow, see the Oven Venting Do's and Don'ts section of the Wood Stone website.

Connect the flue to the oven's flue collar. This flue must be a grease-rated duct. If the oven is being completely enclosed, make certain the duct system has been approved by the authority having jurisdiction before covering. See the Oven Venting section on the Wood Stone website for more details.

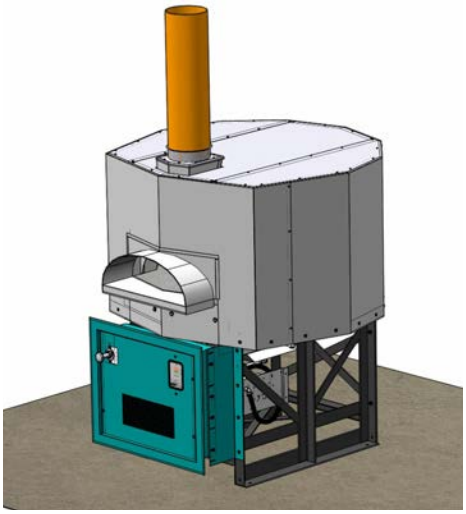

DETAIL > AIRFLOW DETAIL

Air flows through the space under the oven through the perforated air intake on the front of the Service Panel.

This area must be free of obstructions to allow proper airflow. The burners in the gas oven will not operate without sufficient combustion air. To avoid common installation mistakes that affect airflow, see the Oven Venting Do's and Don'ts section on the Wood Stone website.

Flat Wall, Arched Doorway & Service Panel Extension

Step 2. BUILD STUD WALL

The stud wall is shown in green. Metal studs are recommended. Around the doorway area metal studs are required. Maintain a 1-inch clearance from the oven to combustible materials. Do not pack this airspace with insulation or any other material. A zero-inch clearance from the oven to non-combustible materials is allowed. However, the respective clearances to combustibles are transferred to those non-combustibles.

Building materials 6 inches to either side and above the doorway must be non-combustible. See Clearances Detail below.

The Service Panel must be left accessible and unobstructed after installation for air intake and routine service of the oven burner. See Service Panel Extension Detail below.

The oven controller is mounted in the Service Panel. The controller can optionally be mounted in a different position, i.e. in the wall next to the oven. When specified at the time of order, the controller is shipped with a longer wire harness to allow for custom placement, and the Service Panel doesn't have the knockout for the controller. When mounting in the wall, make sure the front face of the controller protrudes approximately 3/4 inches beyond the finished wall surface to allow the box to be opened for service if necessary.

DETAIL > CLEARANCES

A major cause of oven-related fires is a failure to maintain required clearances to combustible material. Required clearances for Mountain Series ovens are defined as follows:

A. Provide 1-inch side clearance to combustible building materials. Do not pack this airspace with insulation or any other material.

B. Provide a non-combustible floor surface AND for ovens utilizing solid fuel, a non-combustible floor surface covering at least 30" to each side, and 36" in front of the door opening.

C. Provide 6" top clearance to combustible building materials.

D. Any facade materials 6 inches to either side of the doorway and above must be of non-combustible construction with no exceptions.

Note: A zero-inch clearance to non-combustible construction is allowed. However, the respective clearances to combustibles are transferred to these non-combustibles.

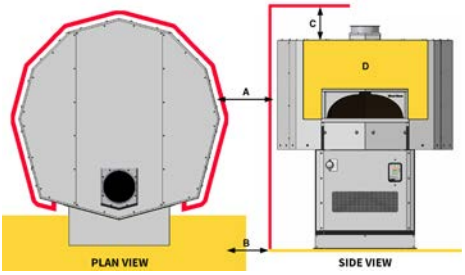

DETAIL > SERVICE PANEL EXTENSION

When the facade is complete, the Service Panel must remain removable. "A" represents the unobstructed path of the panel for removal. "B" represents the width necessary to keep that path clear after the installation of all building and facade materials.

Any facade or enclosure below the mantle of gas-fired or combination ovens must allow for (1) unobstructed access for removal of service/intake panel or storage box, (2) easy access to all controls and (3) sufficient combustion air for gas burners.

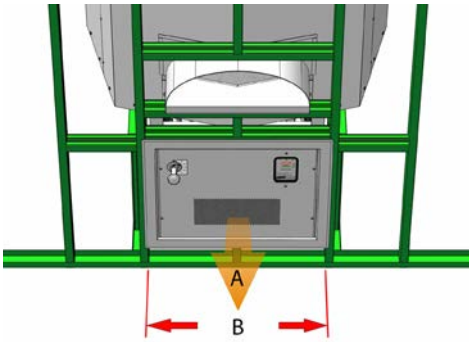

Flat Wall, Arched Doorway & Service Panel Extension

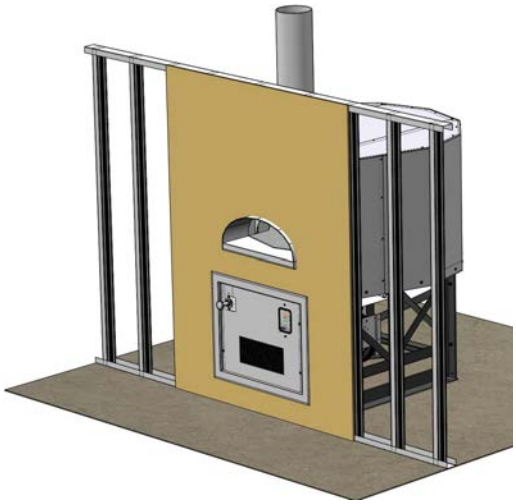

Step 3. INSTALL NON-COMBUSTIBLE UNDERLAYMENT

The material shown in beige is non-combustible cement board. Non-combustible material is required 6 inches to either side and above the oven doorway.

Non-combustible material is required anywhere the facade touches the doorway or mantle. Generally, non-combustible cement board is used as the underlayment material to surround the Service Panel and doorway. Drywall and Sheetrock are considered a combustible and must not be used.

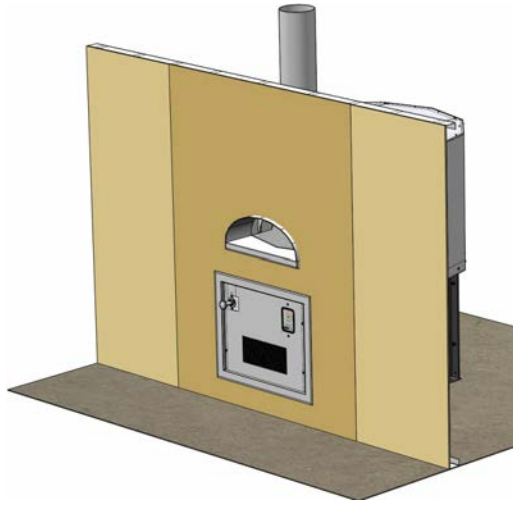

Step 4. INSTALL ADDITIONAL UNDERLAYMENT

Drywall (shown in yellow) is installed on the stud wall. While building materials more than 1 inch away from the oven do not need to be non-combustible, many installers choose to make the entire wall out of the non-combustible cement board to simplify construction and create a consistent facade underlayment.

Flat Wall, Arched Doorway & Service Panel Extension

Step 5. ADD FACADE MATERIAL

The facade wall can be finished with any non-combustible decorative material that can be easily affixed to the wall surface such as tile, stone or brick. It is always advisable to consult with the appropriate authority having jurisdiction before proceeding as there may be regulations regarding the suitability of various materials. Temperatures above the oven doorway can reach 200 °F. Select materials and adhesives suitable for this temperature.

It is necessary for the proper operation of our ovens that the Flame Height Control Knob be fully accessible after all finishing is completed. This knob controls temperature in our gas ovens. See Flame Height Control Knob Detail below.

An optional Flame Height Control Knob Extension Kit is available to extend the length of the shaft in order to accommodate any facade depth, although this is not necessary when using Facade Extensions available from Wood Stone.

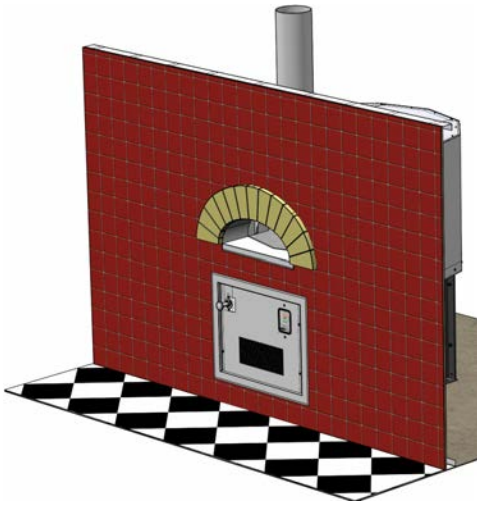

DETAIL > FLAME HEIGHT CONTROL KNOB

The Flame Height Control Knob adjusts the height of the radiant flame inside the oven. It is required to operate the oven and must be fully accessible after all finishing is completed.

An optional Flame Height Control Knob Extension Kit is available to extend the length of the shaft in order to accommodate any facade depth, although this is not necessary when using Facade Extensions available from Wood Stone.

MORE INFORMATION

To see innovative design solutions created by other Wood Stone customers, visit the Photo Gallery on the Wood Stone website.

We recommend the following links for additional installation information:

- Wood Stone Facade Extensions
- Tools & Accessories – Hoods
- Custom Oven Finishes
- Unloading & Moving
- Installation Clearances
- Wood Stone Oven Venting
- Oven Venting Do's and Don'ts
- CAD and REVIT Libraries
- Installation and Operation Manuals

Option 8

Cylinder Wall (Silo) with Viewing Window

Wood Stone

mountain series

This tutorial covers cylindrical (silo) facade installations, utilizing the optional Wood Stone Doorway Facade Extension Curved – Small Radius, Service Panel Extension Curved – Small Radius and Air-Cooled Viewing Window Curved. The oven is vented via the direct connect venting method.

Illustrations in this tutorial are representative of all MS models. However, there are some differences between models. Notable specific model differences include the absence of a Flame Height Control Knob on ovens without a radiant flame (WS-MS-W and WS-MS-W-IR models). The WS-MS-4 model does not offer the Air-Cooled Viewing Window as an option.

THE BASE OVEN

The graphic to the right shows the WS-MS-6-RFG-IR oven as it would arrive—with an optional Doorway Facade Extension Curved – Small Radius and Air-Cooled Viewing Window (in the 270° position in this example) already installed. Specification Sheets, CAD symbols and Revit Libraries for all Mountain Series ovens can be found in the Downloads section on the Wood Stone website.

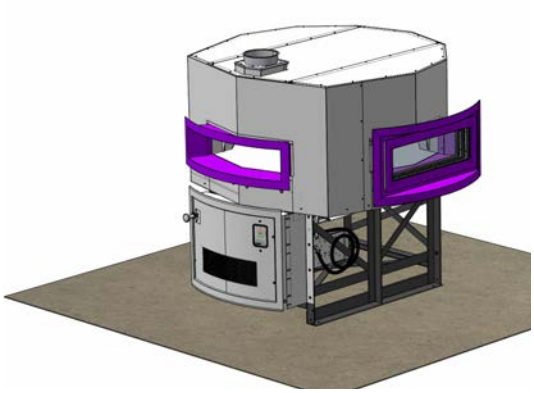

Step 1.

INSTALL SERVICE PANEL FACADE EXTENSION CURVED

Mount the Service Panel Extension Curved –Small Radius, which is shipped uninstalled, per the instructions in the Installation and Operation Manual.

The Service Panel Extension will have been pre-aligned with the Doorway Extension at the factory and then removed for shipping.

Note: Upper and lower extensions should be ordered with the oven so they can be pre-aligned at the factory.

Note the perforated section in the lower section of the inner panel. This area allows airflow to the burners under the oven. It is mandatory that airflow not be blocked. Inadequate combustion air will impact the performance of the oven and cause service issues. See Airflow Detail below.

To avoid common installation mistakes that affect airflow, see the Oven Venting Do's and Don'ts section on the Wood Stone website.

Connect the flue to the oven's flue collar. This flue must be a grease-rated duct. If the oven is being completely enclosed, make certain the duct system has been approved by the authority having jurisdiction before covering. See the Oven Venting section on the Wood Stone website for more details.

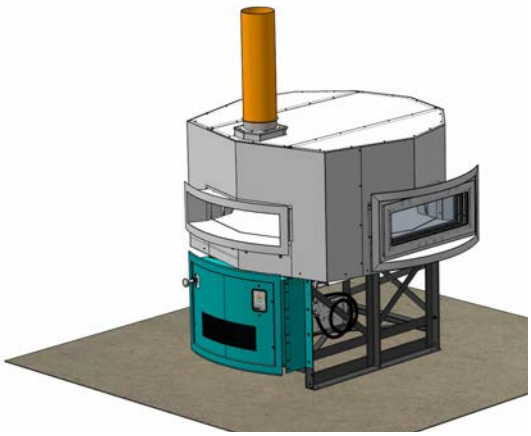

DETAIL > AIRFLOW DETAIL

Air flows through the space under the oven through the perforated air intake on the front of the Service Panel.

This area must be free of obstructions to allow proper airflow. The burners in the gas oven will not operate without sufficient combustion air. To avoid common installation mistakes that affect airflow, see the Oven Venting Do's and Don'ts section on the Wood Stone website.

Cylinder Wall (Silo) with Viewing Window

Step 2. BUILD STUD WALL

The stud wall is shown in green. Metal studs are recommended. Around the doorway and Viewing Window, metal studs are required. Maintain a 1-inch clearance from the oven to combustible materials. Do not pack this airspace with insulation or any other material. A zero-inch clearance from the oven to non-combustible materials is allowed. However, the respective clearances to combustibles are transferred to those non-combustibles.

Note that the radius of the Viewing Window will always be different than the radius of the Doorway / Service Panel Extensions. Between the radius created by these two components, there will be transitional segments, each with its own radius. See Position and Shape Examples Detail below.

Building materials 6 inches to either side and above the doorway and Viewing Window must be non-combustible. These clearance requirements are also true for the Viewing Window. See Clearances Detail on next page.

Building materials 6 inches to either side and above the Viewing Window and doorway must be non-combustible.

The Air-Cooled Viewing Window is designed to provide a window assembly that is much cooler than the oven internal temperature. However, be aware that when in operation, temperatures on the external glass and frame can range from 120 °F to nearly 200 °F. Surfaces above 140 °F can cause burns. A Wood Stone oven is a high temperature commercial appliance. Care should be taken when designing an installation utilizing a Viewing Window to minimize the opportunity for anyone to directly contact the Viewing Window glass or frame while the oven is in operation or hot. In many cases a barrier (by others) will be necessary to ensure a safe installation.

If the flame is located directly in front of the Viewing Window, the window will be EXTREMELY hot and an additional barricade will need to be installed on the exterior to prevent passersby from touching the glass.

The Service Panel must be left accessible and unobstructed after installation for air intake and routine service of the oven burner. See Service Panel Extension Detail below.

The oven controller is mounted in the Service Panel. The controller can optionally be mounted in a different position, i.e. in the wall next to the oven. When specified at the time of order, the controller is shipped with a longer wire harness to allow for custom placement, and the Service Panel doesn't have the cutout for the controller. When mounting in the wall, make sure the front face of the controller protrudes approximately 3/4 inches beyond the finished wall surface to allow the controller box to be opened for service if necessary.

DETAIL > SERVICE PANEL EXTENSION

When the facade is complete, the Service Panel must remain removable. "A" represents the unobstructed path of the panel for removal. "B" represents the width necessary to keep that path clear after the installation of all building and facade materials.

Any facade or enclosure below the mantle of gas-fired or combination ovens must allow for (1) unobstructed access for removal of service/intake panel or storage box, (2) easy access to all controls and (3) sufficient combustion air for gas burners.

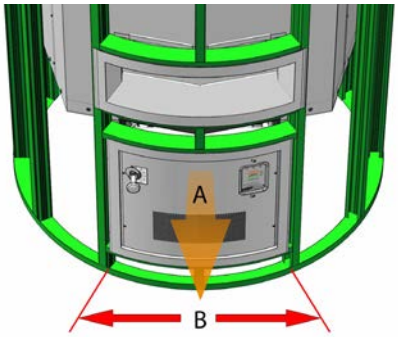

Option 8

Cylinder Wall (Silo) with Viewing Window

Wood Stone

DETAIL > POSITION AND SHAPE EXAMPLES

For WS-MS-5, WS-MS-6 and WS-MS-7 ovens, labeled positions on the diagram to the lower left are available for installation of a Viewing Window. Call the factory to discuss Viewing Window options for the WS-MS-4.

The radius of the Viewing Window (VW) will always be different than the radius of the Doorway / Service Panel Extensions (DW). The transitional segments between these components (X and Y) will each have its own radius.

Examples below are based upon Viewing Window Curved in the noted positions (180° for the WS-MS-5, 270° for the WS-MS-6 and WS-MS-7). All example Extensions are Small Radius. For other Extension or Viewing Window options, visit the Wood Stone website.

	VW Viewing Window Radius	X Radius	DW Doorway/ Facade Extension Radius	Y Radius
WS-MS-5	43-1/2"	45-1/2"	39"	45-1/2"
WS-MS-6	43-1/2"	69-3/4"	44-1/2"	43"
WS-MS-7	43-1/2"	59"	52"	57-1/4"

Note: Examples based upon Viewing Window Curved in the specified positions (180° for the WS-MS-5, 270° for the WS-MS-6 and WS-MS-7). All example Extensions are Small Radius.

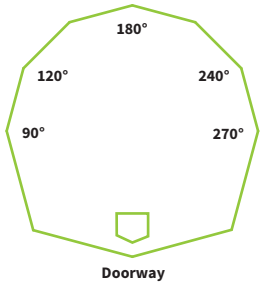

WS-MS POSITION GUIDE

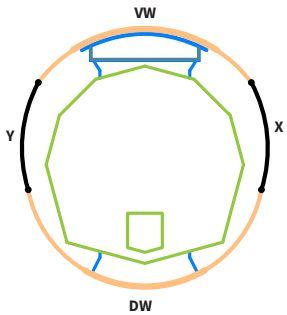

WS-MS-5 @ 180°

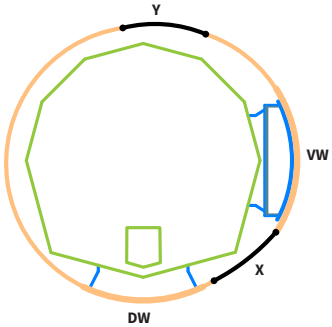

WS-MS-6 @ 270°

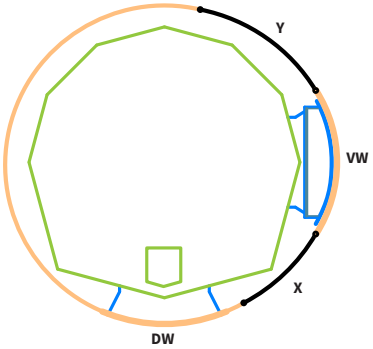

WS-MS-7 @ 270°

DETAIL > CLEARANCES

A major cause of oven-related fires is a failure to maintain required clearances to combustible material. Required clearances for Mountain Series ovens are defined as follows:

A. Provide 1-inch side clearance to combustible building materials. Do not pack this airspace with insulation or any other material.

B. Provide a non-combustible floor surface AND for ovens utilizing solid fuel, a non-combustible floor surface covering at least 30" to each side, and 36" in front of the door opening.

C. Leave a minimum 30" clear area in front of the Viewing Window for cleaning and service.

D. Provide 6" top clearance to combustible building materials.

E. Any facade materials 6 inches to either side of the Viewing Window and doorway and above must be of non-combustible construction with no exceptions.

Note: A zero-inch clearance to non-combustible construction is allowed. However, the respective clearances to combustibles are transferred to these non-combustibles. For Air-Cooled Viewing Window installations: While the temperatures found on the outer surface will usually be safe enough to touch, we do recommend that the oven be installed in such a manner that the window is not located within easy reach of curious customers.

If the flame is located directly in front of the Viewing Window, the window will be EXTREMELY hot and an additional barricade will need to be installed on the exterior to prevent passersby from touching the glass.

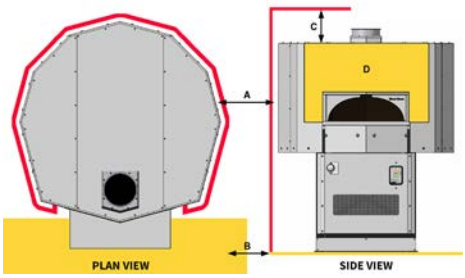

Option
8

Cylinder Wall (Silo) with Viewing Window

Step 3. INSTALL NON-COMBUSTIBLE UNDERLAYMENT

The material shown in beige is non-combustible cement board. Non-combustible material is required 6 inches to either side and above the oven doorway.

Non-combustible material is also required 6 inches to either side and above the Viewing Window.

Non-combustible material is required anywhere the facade touches the doorway or mantle. In this example, non-combustible cement board is used as the underlayment to surround the doorway, mantle and Service Panel. Drywall and Sheetrock are considered a combustible and must not be used.

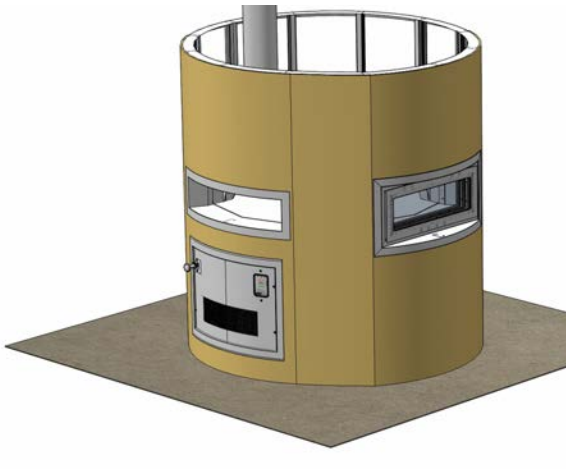

Step 4. INSTALL ADDITIONAL UNDERLAYMENT

Drywall, shown in yellow around the back of structure, is installed on the stud wall. While building materials more than 1 inch away from the oven do not need to be non-combustible, many installers choose to make the entire wall out of the non-combustible cement board to simplify construction and create a consistent facade underlayment for the finish material.

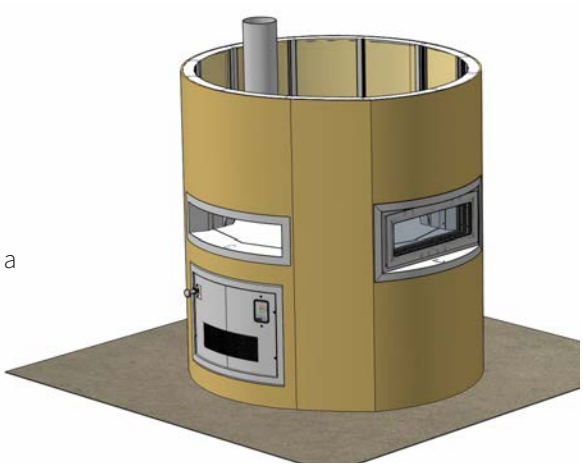

Cylinder Wall (Silo) with Viewing Window

Step 5. ADD FACADE MATERIAL

The facade wall can be finished with any non-combustible decorative material that can be easily affixed to the wall surface such as tile, stone or brick. It is always advisable to consult with the appropriate authority having jurisdiction before proceeding as there may be regulations regarding the suitability of various materials. Temperatures above the oven doorway can reach 200 °F. Select materials and adhesives suitable for this temperature.

It is necessary for the proper operation of our ovens that the Flame Height Control Knob be fully accessible after all finishing is completed. This knob controls temperature in our gas ovens. See Flame Height Control Knob Detail below.

An optional Flame Height Control Knob Extension Kit is available to extend the length of the shaft in order to accommodate any facade depth, although this is not necessary when using Facade Extensions available from Wood Stone.

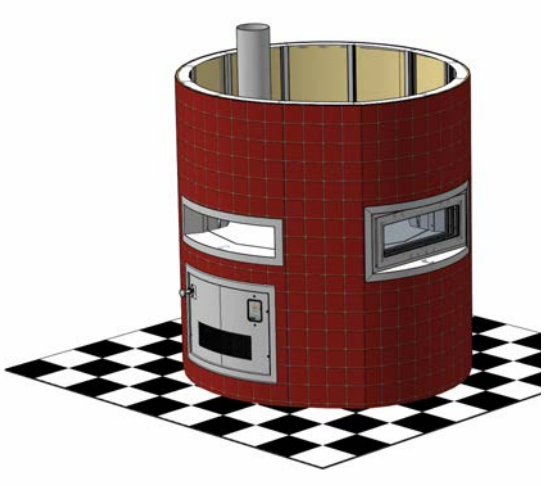

DETAIL > FLAME HEIGHT CONTROL KNOB

The Flame Height Control Knob adjusts the height of the radiant flame inside the oven. It is required to operate the oven and must be fully accessible after all finishing is completed.

An optional Flame Height Control Knob Extension Kit is available to extend the length of the shaft in order to accommodate any facade depth, although this is not necessary when using Facade Extensions available from Wood Stone.

Option 9

On-Site Underlayment

Wood Stone

mountain series

This tutorial covers oven installations with an optional Mantle, standard Service Panel, with installation on-site of facade underlayment and fabrication of a doorway facade lip to allow for field application of tile, stone or other suitable, non-combustible finish materials. The oven is vented via the direct connect venting method.

Illustrations in this tutorial are representative of all MS models. However, there are some differences between models. Notable specific model differences include the absence of a Flame Height Control Knob on ovens without a radiant flame burner (WS-MS-W and WS-MS-W-IR models). The WS-MS-4 model has a flat face above the doorway, and if equipped with an underfloor IR burner, does not support Storage Box Extensions due to space limitations.

THE BASE OVEN

The graphic to the left shows the WS-MS-5-RFG-IR oven as it would arrive. Specification Sheets, CAD symbols and Revit Libraries for all Mountain Series ovens can be found in the Downloads section on the Wood Stone website.

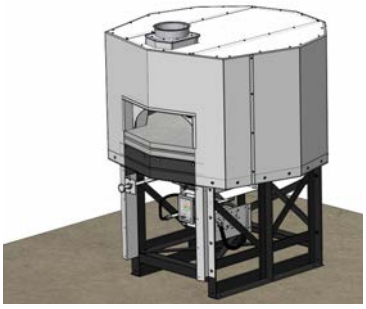

Step 1. INSTALL SUPPLIED OVEN COMPONENTS

Mount the Service Panel, Toe Kick and optional stainless steel Mantle per the instructions in the Installation and Operation Manual.

Note the location of the perforated air intake on the Service Panel. Combustion air flows into the space under the oven through this area, which must be left free of obstructions. See Airflow Detail below.

To avoid common mistakes that affect airflow, see the Oven Venting Do's and Don'ts section on the Wood Stone website.

Connect the flue to the oven's flue collar. This flue must be a grease-rated duct. If the oven is being completely enclosed, make certain the duct system has been approved by the authority having jurisdiction before covering. See the Oven Venting section on the Wood Stone website for more details.

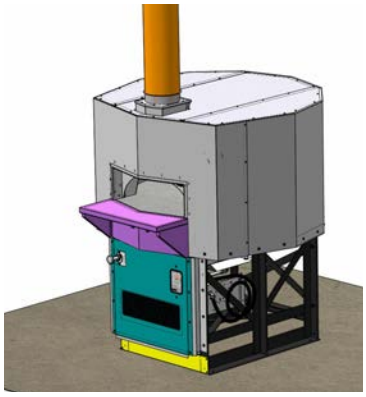

DETAIL > AIRFLOW

Air flows into the space under the oven through the perforated air intake on the front of the Service Panel.

This area must be free of obstructions to allow proper airflow. The burners in the gas oven will not operate without sufficient combustion air. To avoid common installation mistakes that affect airflow, see the Oven Venting Do's and Don'ts section on the Wood Stone website.

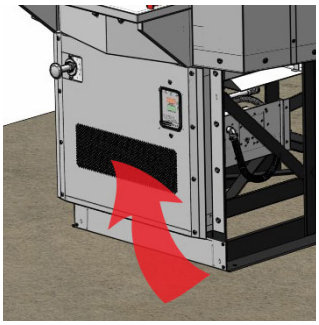

Step 2. INSTALL DOORWAY LIP

Before applying cement board, it is necessary to extend the lip around the doorway to provide a clean finished look to the ends of the facade material. The doorway lip must be stainless steel to meet sanitary requirements. This part can be ordered from Wood Stone, or, alternatively, fabricated on-site. See Doorway Lip Detail below.

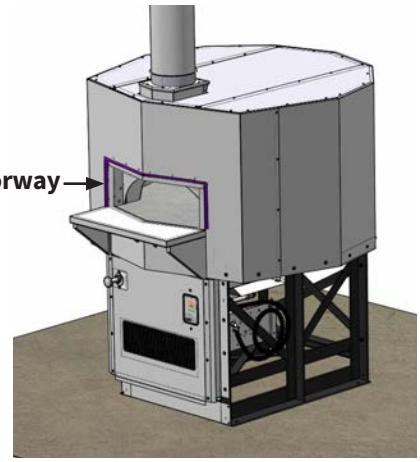

DETAIL > DOORWAY LIP

The purpose of the doorway lip is to provide a finished edge where the facade material meets the doorway. It must be installed before application of the cement board. The angled piece of 14 gauge stainless steel, available as an optional part from Wood Stone, slides between the existing doorway trim and oven face. Alternatively, a comparable part could be fabricated on-site.

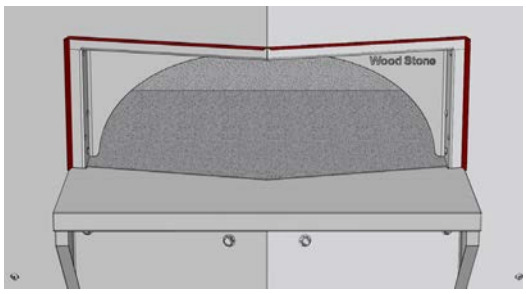

On-Site Underlayment

Step 3. INSTALL NON-COMBUSTIBLE UNDERLAYMENT

The material shown in beige is non-combustible cement board. All materials attached directly to the oven must be non-combustible. See Clearances Detail on next page.

Cement board, cut-to-size (taking care to avoid covering any critical operational or service access areas), must be glued and screwed into the sheet metal lagging. The area above the oven doorway can reach temperatures of 200 °F. We recommend using an adhesive rated for at least 200 °F.

Apply a liberal amount of adhesive to the sheet metal. Then use self-tapping screws to attach the cement board. For typical installations using 1/2 inch thick cement board, use a 1-inch self-tapping Phillips screw with a flat, countersunk head. Be certain all screw heads are flush to the surface. If attaching to stainless steel lagging, it will be necessary to pre-drill the screw holes.

If the Service Panel will be covered, the covering must allow for the same amount of air intake as is supplied by the perforated, factory-provided Service Panel. Be aware that additional weight added to this panel can present challenges when servicing the oven.

All service and maintenance to the oven occur from beneath the oven—the Service Panel is the ONLY access to the area beneath the oven. The Service Panel must be removable and provide the same area of access as the supplied panel. See Service Panel Detail below.

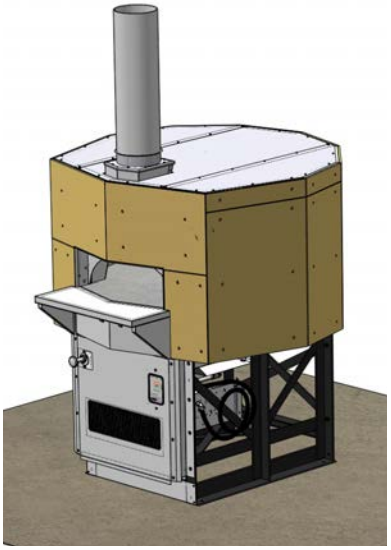

DETAIL > SERVICE PANEL

When the facade is complete, the Service Panel must remain removable. "A" represents the unobstructed path of the panel for removal. "B" represents the width necessary to keep that path clear after the installation of all building and facade materials.

Any facade or enclosure below the mantle of gas-fired or combination ovens must allow for (1) unobstructed access for removal of service/intake panel or storage box, (2) easy access to all controls and (3) sufficient combustion air for gas burners.

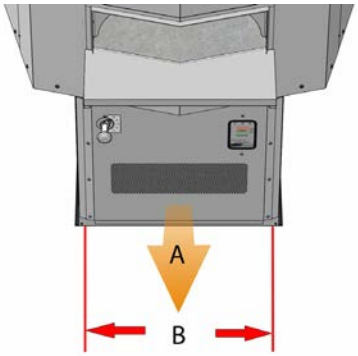

Wood Stone

DETAIL > CLEARANCES

A major cause of oven-related fires is a failure to maintain required clearances to combustible material. Required clearances for Mountain Series ovens are defined as follows:

A. Provide 1-inch side clearance to combustible building materials. Do not pack this airspace with insulation or any other material.

B. Provide a non-combustible floor surface AND for ovens utilizing solid fuel, a non-combustible floor surface covering at least 30" to each side, and 36" in front of the door opening.

C. Provide 6" top clearance to combustible building materials.

D. Any facade materials 6 inches to either side of the doorway and above must be of non-combustible construction with no exceptions.

Note: A zero-inch clearance to non-combustible construction is allowed. However, the respective clearances to combustibles are transferred to these non-combustibles.

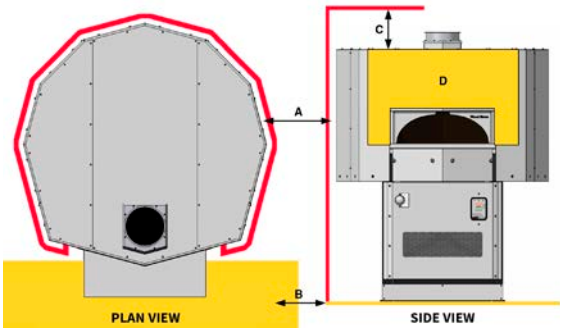

Step 4. ADD FACADE MATERIAL

The facade wall can be finished with any non-combustible decorative material that can be easily affixed to the wall surface such as tile, stone or brick. It is always advisable to consult with the appropriate authority having jurisdiction before proceeding as there may be regulations regarding the suitability of various materials. Temperatures above the oven doorway can reach 200 °F. Select materials and adhesives suitable for this temperature.

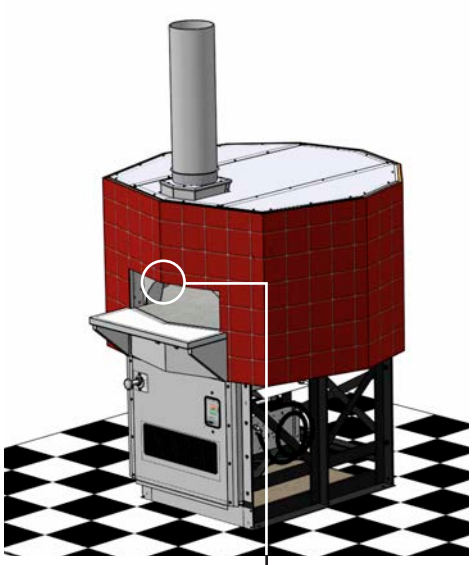

COMMON INSTALLATION DIMENSIONS

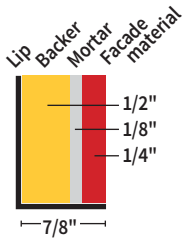

Note: Depending on the thickness of facade material, mortar and backer used, there may be a portion of the facade lip that extends beyond the finished facade, exposing sharp corners. This can safely be trimmed or ground off.

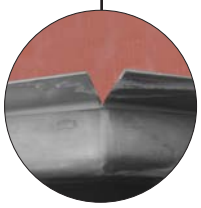

Fire Deck Series Facade Tutorials

fire deck series

Because of their rectangular shape, Fire Deck Series ovens are often incorporated into a kitchen design by applying facade materials, such as tile, stone or brick, directly onto the oven exterior. When ordered with an Air-Cooled Viewing Window, a facade wall will be required. The following tutorials present examples of both installation configurations, including both on-site underlayment and factory-installed underlayment. See the Photo Gallery on the Wood Stone website for even more inspiration.

Options

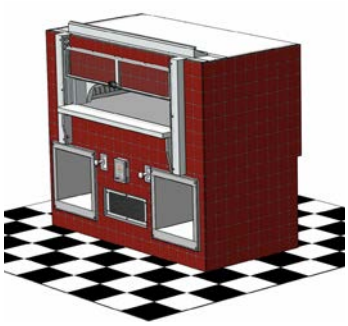

1 | Directly-on-Oven Installation

This tutorial covers oven installations with either on-site underlayment or factory-installed underlayment.

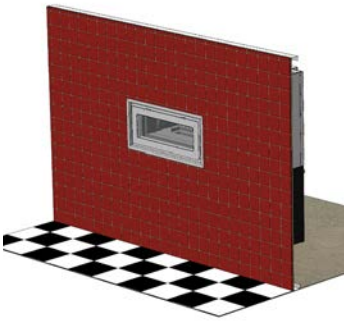

2 | Flat Wall with Air-Cooled Viewing Window

This tutorial covers flat wall facade installations with an optional Air-Cooled Viewing Window.

Questions?
Please call us toll free at 800.988.8103. Our business hours are 8am to 4:30pm PST, Monday–Friday.

Option 1

Directly-on-Oven Facade Installation

Wood Stone

fire deck series

This tutorial covers facade installations directly onto Fire Deck Series ovens, using the Fire Deck 8645 as an example.

Although the basic rectangular shape is representative of all Fire Deck ovens, there are a few differences. The Fire Deck 8645 (and Fire Deck 6045) features a ceramic glass door / heat shield and must be vented using a Listed Type 1 Exhaust Hood. Top clearance to combustible construction is 24". Differences between customer-configured Fire Deck models include the position and number of Flame Height Control Knobs, the absence of Flame Height Control Knobs on solid fuel only models, and on coal-fired models, the addition of an Ash Chute and Blower Fan Controller.

Specification sheets, CAD symbols and Revit libraries for all Fire Deck ovens can be found in the Downloads section on the Wood Stone website.

THE BASE OVEN

Mounted on a painted steel stand, Fire Deck Series ovens are available in stainless steel, color powder coat, galvanized steel, as well as facade-ready.

For facade-ready ovens, non-combustible cement board is installed at the factory, ready for application of thinset or approved high-heat adhesive under the facade material.

The illustration to the right shows a Fire Deck 8645 oven with two storage boxes.

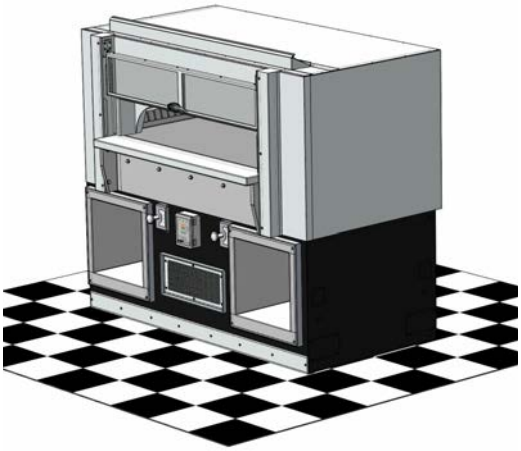

Step 1. NON-COMBUSTIBLE UNDERLAYMENT

To prepare the oven for the installation of non-combustible facade materials such as tile, stone or brick, a non-combustible base must first be installed.

This can be accomplished one of two ways:

Option 1: On-Site Underlayment Installation

Cement board, cut-to-size (taking care to avoid covering any critical operational or service access areas), must be glued and screwed into the steel underlayment. The adhesive must be appropriate for high-temperature environments; pre-drilling is required for stainless steel ovens; countersinking is required for all screws.

While possible, we do not recommend on-site underlayment installation on Fire Deck models. With the advantage of custom components, the factory-installed option addresses the issues of tile/oven junctions, creating a professionally finished look. Duplicating the function of these custom components on site would be difficult and time-consuming.

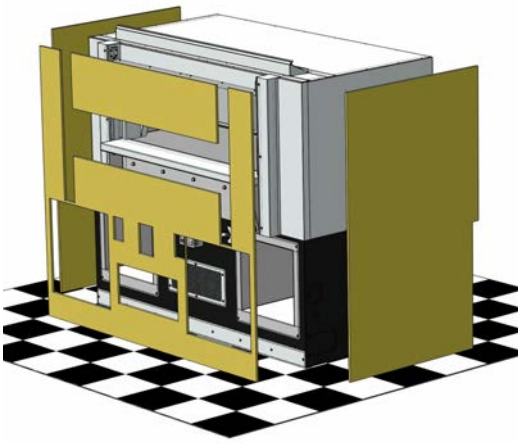

Option 1 Directly-on-Oven Facade Installation

Wood Stone

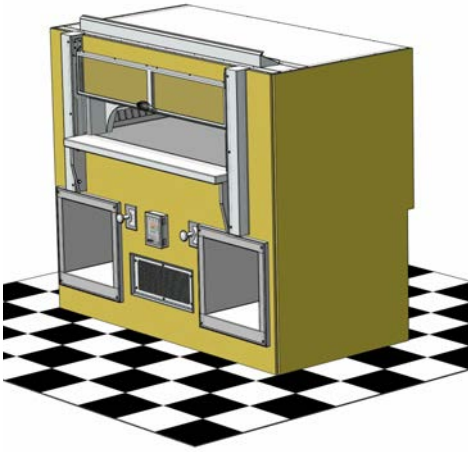

Option 2: Factory-Installed Underlayment

With the facade-ready option, non-combustible cement board is installed at the factory, ready for the application of facade materials. Additionally, key edges are raised to account for the thickness of the facade material. See Facade-Ready Detail below. The front can be prepared (standard), as well as the sides and rear, per request. See Clearances Detail below.

DETAIL > FACADE-READY

Facade-ready Fire Decks include not only pre-installed cement board, but the edges of the Service Panel, Storage Box, Air Intake, Doorway and Control Knob components are extended (shown in green) to create a lip, providing a clean finished look to the ends of the facade material.

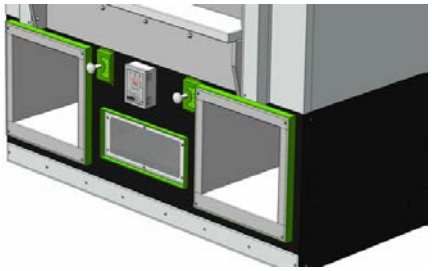

DETAIL > CLEARANCES

A major cause of oven-related fires is a failure to maintain required clearances to combustible material. Required clearances for Fire Deck Series ovens are defined as follows:

A. Provide 1-inch side and back clearance to combustible building materials. Do not pack this airspace with insulation or any other material.

B. Provide a non-combustible floor surface AND for ovens utilizing solid fuel, a non-combustible floor surface covering at least 30" to each side, and 36" in front of the door opening.

C. Provide top clearance to combustible building materials according to model (see data plate).

D. Any facade materials 6 inches to either side of the doorway and above must be of non-combustible construction with no exceptions.

Note: A zero-inch clearance to non-combustible construction is allowed. However, the respective clearances to combustibles are transferred to these non-combustibles.

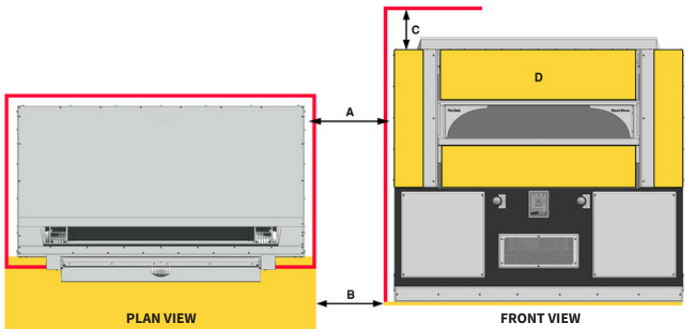

Step 2. ADD FACADE MATERIAL

Fire Deck Series ovens can be finished with any non-combustible decorative material that can be easily affixed to the oven surface, including tile, stone or brick. It is always advisable to consult with the appropriate authority having jurisdiction before proceeding as there may be regulations regarding the suitability of various materials. Temperatures above the oven doorway can reach 200 °F. Select materials and adhesives suitable for that temperature.

WS-FD-6045 & WS-FD-8645 models only: The thickness of finish material applied to the oven above the doorway cannot exceed 1/2 inch (1 inch including non-combustible underlayment) or it will interfere with operation of the Heat Shield.

Flame Height Control Knobs, and all other operational or service areas (service panels and storage boxes), must be left unobstructed. They must be fully accessible after all finishing is completed.

To see creative design solutions from other Wood Stone customers, visit the Photo Gallery on the Wood Stone website.

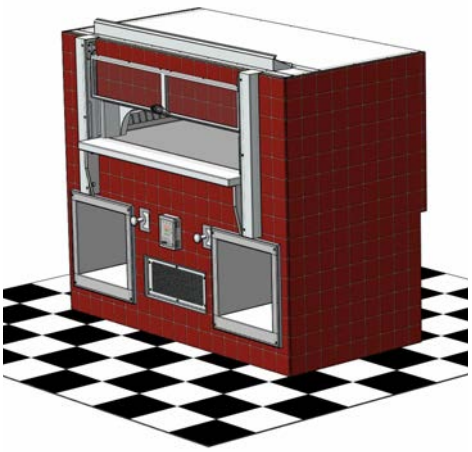

Option 2

Flat Wall with Air-Cooled Viewing Window

Wood Stone

fire deck series

This tutorial covers facade installations of an Air-Cooled Viewing Window into a Flat Wall, using the Fire Deck 6045 as an example. Note only the Viewing Window Flat model is available for Fire Deck ovens.

Although the basic rectangular shape is representative of all Fire Deck ovens, there are a few differences. The Fire Deck 6045 (and Fire Deck 8645) features a ceramic glass door / heat shield and must be vented using a Listed Type 1 Exhaust Hood. Top clearance to combustible construction is 24". Differences between customer-configured Fire Deck models include the position and number of Flame Height Control Knobs, the absence of Flame Height Control Knobs on solid fuel only models, and on coal-fired models, the addition of an Ash Chute and Blower Fan Controller.

Specification sheets, CAD symbols and Revit libraries for all Fire Deck ovens can be found in the Downloads section on the Wood Stone website.

THE BASE OVEN

Mounted on a painted steel stand, Fire Deck Series ovens are available in stainless steel, color powder coat, galvanized steel, as well as facade-ready.

For facade-ready ovens, non-combustible cement board is installed at the factory, ready for application of thinset or approved high-heat adhesive under the facade material. Which sides of the oven are covered with facade material must be specified at time of order.

See the **Directly-on-Oven Facade Installation** tutorial for more details.

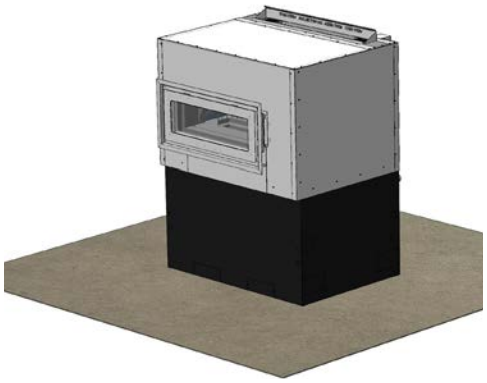

Step 1. BUILD STUD WALL

The stud wall is shown in green. Metal studs are recommended. Around the Viewing Window and doorway, metal studs are required. Maintain a 1-inch clearance from the oven to combustible materials. Do not pack this airspace with insulation or any other material. A zero-inch clearance from the oven to non-combustible materials is allowed. However, the respective clearances to combustibles are transferred to those non-combustibles.

Building materials 6 inches to either side and above the Viewing Window and doorway must be non-combustible.

The Air-Cooled Viewing Window is designed to provide a window assembly that is much cooler than the oven internal temperature. However, be aware that when in operation, temperatures on the external glass and frame can range from 120 °F to nearly 200 °F. Surfaces above 140 °F can cause burns. A Wood Stone oven is a high temperature commercial appliance. Care should be taken when designing an installation utilizing a Viewing Window to minimize the opportunity for anyone to directly contact the Viewing Window glass or frame while the oven is in operation or hot. In many cases a barrier (by others) will be necessary to ensure a safe installation.

If the flame is located directly in front of the Viewing Window, the window will be EXTREMELY hot and an additional barricade will need to be installed on the exterior to prevent passersby from touching the glass.

Option 2 Flat Wall with Air-Cooled Viewing Window

Wood Stone

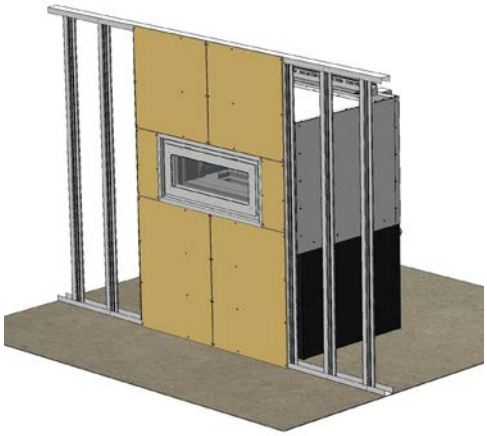

Step 2. INSTALL NON-COMBUSTIBLE UNDERLAYMENT

The material (shown in beige) is non-combustible cement board installed on the stud wall. Non-combustible material is required 6 inches to either side and above the Viewing Window. See Clearances Detail below.

Non-combustible material is required anywhere the facade touches the Viewing Window. In this example, non-combustible cement board is used as the underlayment material to surround the Viewing Window. Drywall and Sheetrock are considered a combustible and must not be used.

DETAIL > CLEARANCES

A major cause of oven-related fires is a failure to maintain required clearances to combustible material. Required clearances for Fire Deck Series ovens are defined as follows:

A. Provide 1-inch side and back clearance to combustible building materials. Do not pack this airspace with insulation or any other material.

B. Provide a non-combustible floor surface AND for ovens utilizing solid fuel, a non-combustible floor surface covering at least 30" to each side, and 36" in front of the door opening.

C. Leave a minimum 30" clear area in front of the Viewing Window for cleaning and service.

D. Provide top clearance to combustible building materials based upon model (see data plate).

E. Any facade materials 6 inches to either side of the Viewing Window and doorway and above must be of non-combustible construction with no exceptions.

Note: A zero-inch clearance to non-combustible construction is allowed. However, the respective clearances to combustibles are transferred to these non-combustibles.

For Air-Cooled Viewing Window installations: While the temperatures found on the outer surface will usually be safe enough to touch, we do recommend that the oven be installed in such a manner that the window is not located within easy reach of curious customers.

If the flame is located directly in front of the Viewing Window, the window will be EXTREMELY hot and an additional barricade will need to be installed on the exterior to prevent passersby from touching the glass.

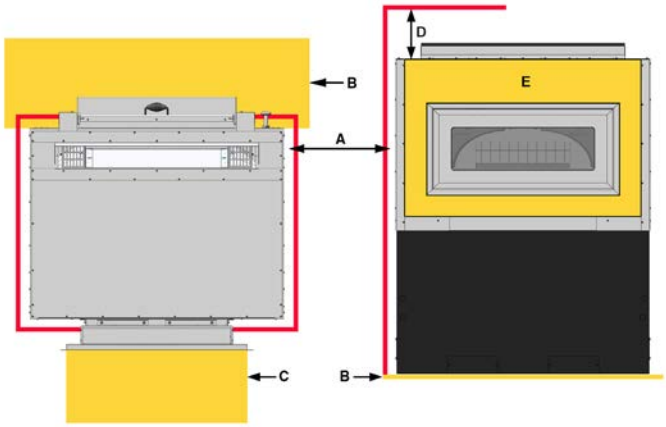

Option 2

Flat Wall with Air-Cooled Viewing Window

Wood Stone

Step 3. INSTALL ADDITIONAL UNDERLAYMENT

Drywall (shown in yellow around the back of structure) is installed on the stud wall. While building materials more than 1 inch away from the Viewing Window do not need to be non-combustible, many installers choose to make the entire wall out of the non-combustible cement board to simplify construction and create a consistent facade underlayment for the finish material.

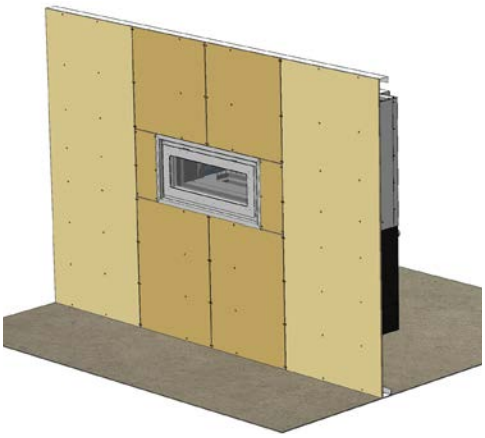

Step 4. ADD FACADE MATERIAL
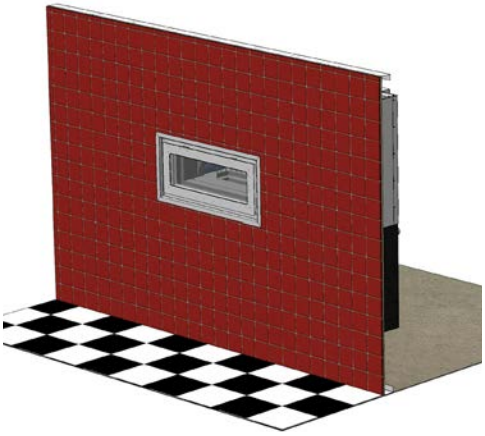
The facade wall can be finished with any non-combustible decorative material that can be easily affixed to the underlayment, including tile, stone or brick. It is always advisable to consult with the appropriate authority having jurisdiction before proceeding as there may be regulations regarding the suitability of various materials.