Wood Stone

TANDOOR 31"
GAS-FIRED TANDOOR

Job Name	
Model	WS-GFT-31
Item#	

WS-GFT-31-Round Tandoor model shown.

FEATURES

- Cooks like Clay
- Long Lifespan
- Durable Ceramic Interior
- Consistent Reliable Heat
- 35" Model Also Available
- Round, Square and Octagonal Shapes Available
- Fits Through Standard Doorways

The Wood Stone gas-fired Tandoor features a cooking chamber that uses the same ultra-strong, high-temperature ceramic technology that we utilize in our stone hearth ovens.

The unit is available in a round, square and octagonal shape. The ceramic cooking chamber has a 12-inch opening and is encased in an insulated, stainless steel cabinet. The Tandoor is topped with an attractive and durable quartz composite that simulates the look of black granite. The entire unit sits on heavy-duty casters and includes a Naan Hook, Naan Scraper and Skewers.

The gas burner uses a pilot safety valve, equipped with a Piezo-Electric ignition system. The heat output of the burner can be adjusted from its highest setting to completely turned off (or any setting in between) by turning the Flame Height Control Knob, which is conveniently located on the top of the unit.

The Tandoor comes with a lightweight, ventilated lid for faster heat-up and a Skewer Indexing Ring to support and position skewers. A removable drip/debris pan is located beneath the unit.

Wood Stone Tandoors can be configured to burn Natural Gas or Propane—this should be specified at the time of order. Restraint anchors for a flexible gas supply line restraining cable are located beneath the unit. The 31-inch round footprint of this unit makes it easy to fit through standard doors and into an existing cook line.

The unit may be ordered with a caster riser assembly to increase the height of the Tandoor to 36 inches, enabling easy installation into a cooking suite.

Wood Stone 31" Tandoors arrive completely assembled, ETL Listed, ready to install and are made in the USA. Information about custom finishes, tools and accessories can be found online at: woodstone-corp.com.

Intertek
ANSI Z83.11:2016 Ed.4
CSA 1.8:2016 Ed.4

Intertek
ANSI/NSF STD 4

t. 360.650.1111
tf. 800.988.8103
f. 360.650.1166

Wood Stone Corporation
1801 W. Bakerview Rd.
Bellingham, WA 98226 USA
info@woodstone-corp.com
woodstone-corp.com

REVISED: SPRING 2017

An ongoing program of product improvement may require us to change specifications without notice.

Wood Stone

TANDOOR 31"

GAS-FIRED TANDOOR • WS-GFT-31

B	Removable Lid
C	Flame Height Control Knob
D	Removable Drip Tray
G	Gas Connection
	Must Be Left Removable for Service

PLAN VIEWS

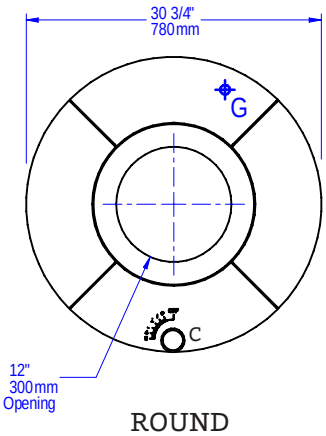

ROUND

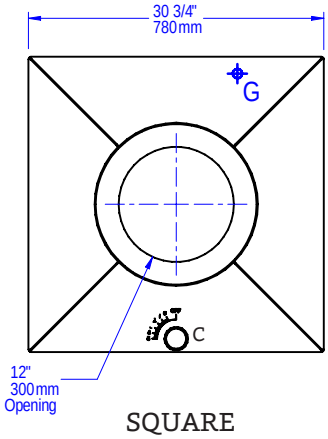

SQUARE

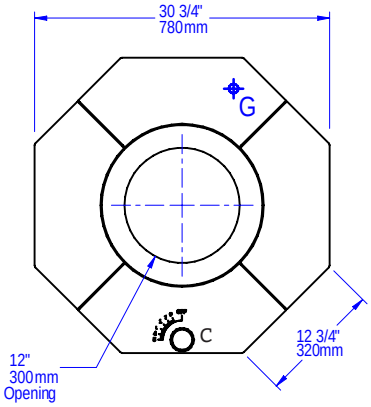

OCTAGONAL

FRONT VIEW

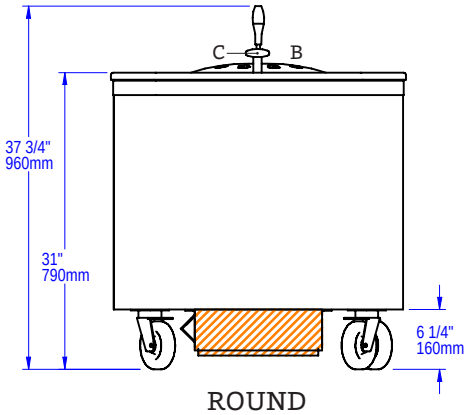

ROUND

SIDE VIEW

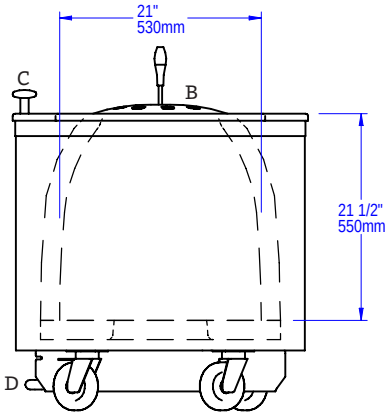

ROUND

UTILITIES SPECIFICATIONS

GAS
½ inch gas inlet (FNPT)
40,000 BTU/hr - Natural Gas (NG)
OR
40,000 BTU/hr - Propane (LP)

Note: Gas type must be specified at time of order.

VENTING INFORMATION

The Tandoor 31" must be vented with a Listed Type 1 exhaust hood, or one constructed in accordance with NFPA 96 and all relevant local and national codes. The oven must be vented in accordance with all relevant local and national codes, and in a manner acceptable to the authority having jurisdiction.

Ship Weight: 750 lbs / 340 kg

Intertek
ANSI Z83.11:2016 Ed.4
CSA 1.8:2016 Ed.4

Intertek
ANSI/NSF STD 4

t. 360.650.1111
tf. 800.988.8103
f. 360.650.1166

Wood Stone Corporation
1801 W. Bakerview Rd.
Bellingham, WA 98226 USA
info@woodstone-corp.com
woodstone-corp.com

REVISED: SPRING 2017

An ongoing program of product improvement may require us to change specifications without notice.

Wood Stone