Contact Area of Oven Stand	696	in²	449031	mm²
	4.83	ft²	0.449	m²
Oven Weight	3,300	lb	14678	N
Floor Loading of Oven Stand	683	lb/ft²	32689	N/m²
	4.74	lb/in²	33	kPa

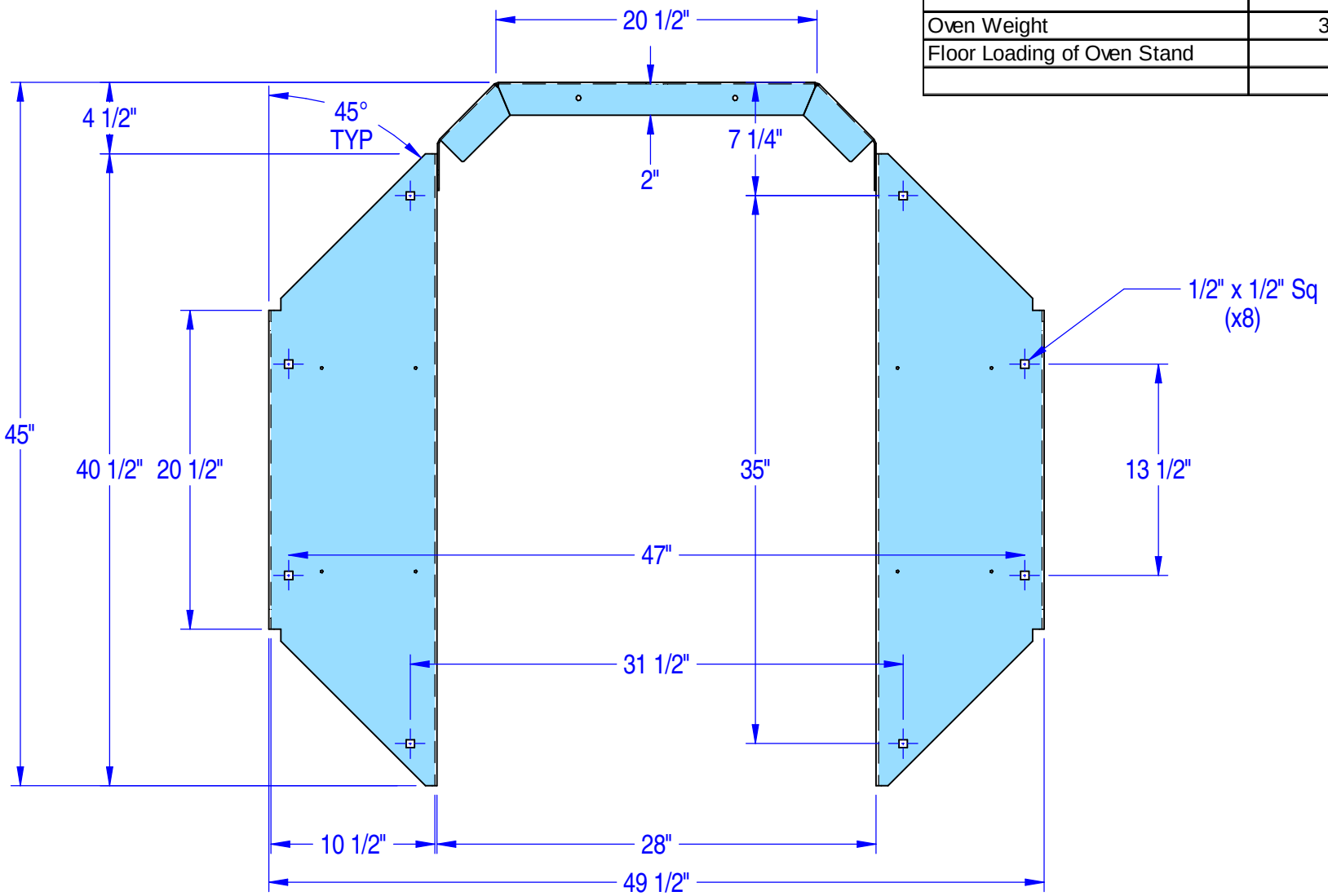

Oven's Contact Area with Floor

An ongoing program of product improvement may require us to change specifications without notice.

DIMENSIONS ARE IN INCHES
TOLERANCES: LINEAR ±1/4
UNLESS NOTED OTHERWISE

THE INFORMATION CONTAINED IN THIS DRAWING IS THE SOLE PROPERTY OF WOOD STONE CORPORATION
ANY REPRODUCTION OR USE IN PART OR AS A WHOLE WITHOUT THE WRITTEN PERMISSION OF WOOD STONE IS PROHIBITED

Wood Stone
Bellingham, WA 98226 (360) 650-1111 www.woodstone-corp.com

5048 Duck Oven Foot Print

SHEET: 1 of 1
REV: 0
DWN BY: charleyh
PART #: 001-505048-FP
DATE: 5/30/2013